15’ PREDATOR BONDIOLI CUTTER

Operator’s Manual

001-1500
001-1500-1
001-1500-2
001-1500-3
001-1500-4
001-1502
001-1502-1
001-1502-3
001-1502-4

MODERN
AG PRODUCTS,LTD.

YOU'RE ALWAYS AHEAD...WITH A MODERN BEHIND.

P.O. BOX 790 • BEAUMONT, TX 77704
409.833.2665 • 1.800.231.8198 FAX: 409.726.8333
www.modernusa.com

LAST REVISION
FALL 2012

Go Galvanized!

INTRODUCTION

Your heavy-duty cutter is designed primarily for weed, grass and brush to 3 1/2" diameter. With proper maintenance as described in the manual, your cutter will provide you with years of dependable service with a minimum of repairs.

It is recommended that all operators of this implement read this manual or be instructed of its contents as to safety, proper operation, and maintenance before beginning operation.

Your cutter has been assembled for operation with a tractor PTO input speed of 540 or 1000 RPM. Verify your RPM with your local dealer prior to operation. Should you desire to change PTO input speed, contact your local dealer. This series of cutter is recommended for use with tractors rated at 50 HP (37 KW) to 120 HP (75 KW) for 540 RPM drive and 50 HP (37KW) to 140 HP (104KW) for 1000 RPM drive.

When ordering parts for the gear boxes and the drivelines, be sure to specify the serial number. The serial number is located on the front right panel on the center deck.

Chain guards, deflectors, driveline integral shields are standard equipment and need to be used at all times.

INTRODUCTION

This Rotary Cutter is designed with care and built with quality materials by skilled workers. Proper assembly, maintenance, and operating practices, as described in this manual, will help the owner/operator get years of satisfactory service from the machine.

The purpose of this manual is to familiarize, instruct, and train. The Assembly Section instructs the owner/operator in the correct assembly of the Cutter using standard and optional equipment. The Parts Listing section is designed to familiarize the owner/operator with replaceable parts on the Cutter. This section provides exploded assembly drawings of each cutter component illustrating each piece and the corresponding part number.

Careful use and timely service save extensive repairs and costly downtime losses. The Operation and Maintenance Sections of the manual train the owner/operator how to work the Cutter correctly and attend to appropriate maintenance. The Trouble Shooting Guide helps diagnose difficulties with the cutter and offers solution to the problems.

Safety is of primary importance to the owner/operator and to the manufacturer. The first section of this manual includes a list of Safety Messages, that, if followed, will help protect the operator and bystanders from injury or death. Many of the Safety Messages will be repeated throughout the manual. The owner/operator/dealer should know these Safety Messages before assembly and be aware of the hazards of operating this cutter during assembly, use, and maintenance. The Safety Alert Symbol combined with a Signal Word, as seen below, is intended to warn the owner/operator of impending hazards and the degree of possible injury faced when operating this machine.

DANGER

Indicates an imminently hazardous situation that, if not avoided, WILL result in DEATH OR VERY SERIOUS INJURY.

WARNING

Indicates an imminently hazardous situation that, if not avoided, COULD result in DEATH OR SERIOUS INJURY.

CAUTION

Indicates an imminently hazardous situation that, if not avoided, MAY result in MINOR INJURY.

Identifies special instructions or procedures that, if not strictly observed, could result in damage to, or destruction of the machine, attachments or the environment.

SAFETY SECTION

SAFETY SECTION

A safe and careful operator is the best operator. Safety is of primary importance to the manufacturer and should be to the owner/operator. Most accidents can be avoided by being aware of your equipment, your surroundings, and observing certain precautions. The safety section of this manual includes a list of guidelines that, if followed, will help protect the operator and bystanders from injury or death. READ, UNDERSTAND, and FOLLOW the following safety guidelines before assembling, operating or servicing this implement. Serious injury or death may occur unless care is taken to follow the warnings and instructions stated in these Safety guidelines. Practice all usual and customary safe working precautions and above all – remember safety is up to YOU.
Only YOU can prevent serious injury or death from unsafe practices.

This equipment should only be operated by those persons who have read the manual, who are responsible and trained, and who know how to do so safely and responsibly.

Si no lee ingles, pida ayuda a alguien que si lo lea para que le traduzca las medidas de seguridad.

General Safety Guidelines

- Never operate the tractor or implement until you have read and completely understand this manual and the tractor operator's manual. Learn how to stop the tractor engine suddenly in an emergency. Never allow inexperienced or untrained personnel to operate the tractor and implement without supervision. Make sure the operator has fully read and understood the manuals prior to operation.

- The operator and all support personnel should wear hard hats, safety shoes, safety glasses, and proper hearing protection at all times for protection from injury including injury from items that may be thrown by the equipment.

- Never allow children to operate, ride on, play on or around, or come close to the tractor or implement. Children can slip or fall off the equipment and be injured or killed. Usually, 16-17 year-old children who are mature and responsible can operate the implement with adult supervision, if they have read and understand the operator's manuals, been trained in proper operation of the tractor and implement, and are physically large enough to reach and operate the controls easily.

- NEVER use drugs or alcohol immediately before or while operating the tractor and implement. Drugs and alcohol will affect an operator's alertness and coordination and therefore affect the operator's ability to operate the equipment safely. Before operating the tractor or implement, an operator on prescription or over-the-counter medication must consult a medical professional regarding any side effects of the medication that would hinder their ability to operate the equipment safely. NEVER knowingly allow anyone to operate this equipment when their alertness or coordination is impaired. Serious injury or death to the operator or others could result if the operator is under the influence of drugs or alcohol.

- Prolonged tractor operation may cause operator boredom and fatigue affecting safe operation. Take scheduled work breaks to help prevent these potentially impaired operating conditions. Never operate the implement and tractor in a fatigued or bored mental state which impairs proper and safe operation.

- Tractors with or without an implement attached can often be noisy enough to cause permanent hearing loss. We recommend that you always wear hearing protection if the noise in the operator's position exceeds 80db. Noise over 85db over an extended period of time will cause severe hearing loss. Noise over 90db adjacent to the Operator over an extended period of time will cause permanent or total hearing loss.

Note: Hearing loss from loud noise [from tractors, chain saws, radios, and other such sources close to the ear] is cumulative over a lifetime without hope of natural recovery.

General Safety – Rotating Equipment

- The rotating parts of this machine continue to rotate even after the PTO has been turned off. The operator should remain in his seat for 60 seconds after the brake has been set, the PTO disengaged, the tractor turned off, and all evidence of rotation has ceased.

- Do not put hands or feet under implement decks. Blade contact can result in serious injury or even death. Stay away until all motion has stopped and the decks are securely blocked up.

- Do not operate the implement while wearing loose fitting clothing. Entanglement of the clothing with the rotating elements can result in serious injury or even death. KEEP AWAY FROM ROTATING ELEMENTS to prevent entanglement and possible serious injury or death.

General Safety – Hot Surfaces & Fire Safety

- Follow these guidelines to reduce the risk of equipment and grass fires while operating, servicing, and repairing the tractor and/or implement:

· Equip the tractor with a fire extinguisher in an accessible location.
· Do Not operate the implement on a tractor with an underframe exhaust.
· Do Not smoke or have an open flame near the tractor and/or implement.
· Do Not drive into burning debris or freshly burnt areas.
· Ensure slip clutches are properly adjusted to prevent excessive slippage and plate heating.
· Never allow clippings or debris to collect near drivelines, slip clutches, and gearboxes.

- Avoid contact with hot surfaces including hydraulic oil tanks, pumps, motors, valves and hose connections, engine or muffler. Relieve hydraulic pressure before performing maintenance or repairs. Use gloves and eye protection when servicing hot components. Contact with a hot surface or fluid can cause serious injury from burns or scalding.

Equipment Operation Safety

- All Safety Shields, Guards and Safety devices including (but not limited to) - the Deflectors, Chain Guards, Steel Guards, Gearbox Shields, PTO integral shields, and Retractable Door Shields should be used and maintained in good working condition.

- All safety devices should be inspected carefully at least daily for missing or broken components. Missing, broken, or worn items must be replaced at once. Broken or worn blades must be replaced with NEW blades to reduce the possibility of injury or death from thrown objects, entanglement, or blade contact. NEVER ATTEMPT TO STRAIGHTEN, WELD, OR WELD HARDFACING ON BLADES SINCE THIS WILL LIKELY CRACK OR OTHERWISE DAMAGE THE BLADE WITH SUBSEQUENT FAILURE AND POSSIBLE SERIOUS INJURY FROM THROWN BLADES.

- Operate the tractor and/or implement controls only while seated in the tractor seat with the seat belt securely fastened around you. Inadvertent movement of the tractor or implement may cause serious injury or death. Do not mount/dismount the tractor while the tractor or implement parts are moving. Mount the tractor only when the tractor and all moving parts are completely stopped.

- BEFORE leaving the tractor seat, always engage the brake and/or set the tractor transmission in parking gear, disengage the PTO, stop the engine, remove the key, and wait for all moving parts to stop. Place the tractor shift lever into a low range or parking gear to prevent the tractor from rolling. Never dismount a tractor that is moving or while the engine is running.

- Never leave the tractor and implement unattended while the implement is in the lifted position. Accidental operation of lifting lever or a hydraulic failure may cause sudden drop of theunit possibly resulting in injury or death by crushing. Lower the implement carefully to the ground. Do not put hands or feet under lifted components.

- Do not exceed the rated PTO speed for the implement. Excessive PTO speeds can cause implement driveline or blade failures resulting in serious injury or death.

- Make sure the PTO shield, integral driveline shields, and input shields are installed when using PTO-driven equipment.

- DO NOT operate this implement on a tractor that is not properly maintained. In case of mechanical difficulty during operation, place the transmission in the park position, set the parking brake, shut down all power, including the PTO and the engine and remove the key. Wait until all rotating motion has stop before dismounting and perform repairs before resuming operation. Serious injury and possible death could occur from not maintaining this implement and tractor in good operating condition.

- Do not operate implement if excessive vibration exists. Shut down PTO and the tractor engine. Inspect the implement to determine the source of the vibration. If implement blades are missing

or damaged replace them immediately. Do not operate the implement until the blades have been replaced and the implement operates smoothly. Operating the implement with excessive vibration can result in component failure and broken objects to be thrown outward at very high velocities. To reduce the possibility of property damage, serious injury, or even death, never allow the implement to be operated with blades missing.

- Do not operate this equipment with hydraulic oil or fuel leaking. Oil and fuel are explosive and their presence could present a hazard. Do not check for leaks with your hand! High-pressure oil streams from breaks in the line could penetrate the skin and cause tissue damage.

- To check for a hose leak, SHUT the tractor ENGINE OFF and remove all hydraulic pressure. Wear oil impenetrable gloves, safety glasses and use cardboard to check for evidence of oil leaks.
- If you suspect a leak, REMOVE the HOSE and have it tested at a Dealer. If oil does penetrate the skin, have the injury treated immediately by a physician knowledgeable and skilled in this procedure. Always read carefully and comply fully with the manufacturer's instructions when handling oil, solvents, cleansers, and any other chemical agent.

- Mow at the speed that you can safely operate and control the tractor and implement. Safe mowing speed depends on terrain condition and grass type, density, and height of cut. Normal ground speed range is from 2 to 5 mph. Use slow mowing speeds when operating on or near steep slopes, ditches, drop-offs, overhead obstructions, power lines, or when debris and foreign objects are to be avoided.

- Avoid mowing in reverse direction when possible. Check to make sure there are no persons behind the implement and use extreme care when mowing in reverse. Mow only at a slow ground speed where you can safely operate and control the tractor and implement. Never mow an area that you have not inspected and removed debris or foreign material.

- The implement is designed for certain mowing applications and is rated to cut up to a specific size vegetation (see implement Standard equipment and Specifications on page 18). DO NOT use this implement to cut vegetation above the implement's rated capacity or to cut any type of non-vegetative material. Only operate this implement on a properly sized and equipped tractor. Operating this implement in an application for which it is not designed and/or operating the implement with the wrong size tractor can cause implement component damage and equipment failure resulting in possible serious injury or death.

- Do not operate or pull the implement into standing water. When uplift or fan type implement blades contact water they can be severely deflected downward causing possible failure of blade resulting in serious boldly injury to the operator or bystanders.

- Do not mow with two machines in the same area except with cab tractors with the windows closed.

- Do Not attempt to raise or lower the implement wing unless the implement tongue is securely attached to the tractor drawbar. The implement could tip over and cause equipment damage

and possible serious injury or death. Raise or lower the implement wing only while seated in the tractor operator's seat with the seat belt securely fastened.

- Do not turn so sharp or lift implement so high to produce a severe "knocking" of the driveline which will cause accelerated wear and breakage of drive train components and could result in possible injury from the separated Driveline sections.

- Periodically shut down the tractor and implement and clean clippings and collected debris from the implement deck. DO NOT approach the implement unless the tractor is turned off and all motion has ceased.

- Never crawl under a raised implement supported solely by the tractor 3-Point hitch. Release of the control lever or mechanical failure will result in the implement falling and possible injury or death. Always securely block up the implement before crawling underneath to perform repairs and service. DO NOT allow any person under a folded wing unless wing is securely locked up or supported.

Equipment Operation Safety – Clearances and Obstructions

- Rotary implements are capable under adverse conditions of throwing objects for great distances (300 feet or more) and causing serious injury or death. Follow safety guidelines carefully.

- STOP MOWING IF PASSERSBY ARE WITHIN 100 YARDS

- Be sure you have adequate knowledge of the property you will be working on. Take time to make yourself aware of any area underground lines or cables. Always keep a careful lookout and use extreme care when working around utility and municipal obstructions. Never allow the implement to contact any utility, municipal, or other type structure. Clearly mark all mowing obstructions and consult local utility providers for a safe code of operation.

- Mow only in conditions where you have clear visibility in daylight or with adequate artificial lighting. Never mow in darkness or foggy conditions where you cannot clearly see at least 100 yards in front and to the sides of the tractor and implement. Make sure that you can clearly see and identify passersby, steep slopes, ditches, drop-offs, overhead obstructions, power lines, debris and foreign objects. If you are unable to clearly see these types of items discontinue mowing.

- This implement is wider than the tractor. Be careful when operating or transporting this equipment to prevent the implement from running into or striking sign posts, guard rails, concrete abutments or other solid objects. Such an impact could cause the implement and tractor to pivot violently resulting in loss of steering control, serious injury, or even death. Never allow the implement to contact obstacles.

SAFETY SECTION

- Use extreme care when lowering or unfolding the implement's wings. Make sure no bystanders are close by or underneath the wings. Allow ample clearance around the implement when folding or unfolding the wings.

- The rotating parts of this machine have been designed and tested for rugged use. However, the blades could fail upon impact with heavy, solid objects such as metal guard rails and concrete structures. Such impact could cause the broken objects to be thrown outward at very high velocities. To reduce the possibility of property damage, serious injury, or even death, never allow the cutting blades to contact such obstacles.

- Extreme care should be taken when operating near loose objects such as gravel, rocks, wire, and other debris. Inspect the area before mowing. Foreign objects should be removed from the site to prevent machine damage and/or bodily injury or even death. Any objects that cannot be removed must be clearly marked and carefully avoided by the operator. Stop mowing immediately if blades strike a foreign object. Repair all damage and make certain rotor or blade carrier is balanced before resuming mowing.

- This machine is often operated in heavy brush and in heavy weeds. The blades of this implement can throw objects if shields are not properly installed and maintained. Serious injury or even death may occur unless care is taken to insure the safety of the operator, bystanders, or passersby in the area. Do not operate this machine with anyone in the immediate area. Stop mowing if anyone is within 100 yards of implement.

Note: Where there are grass and weeds high enough to hide debris that could be struck by the blades, the area should be: inspected and large debris removed, mowed at an intermediate height, inspected, closely with any remaining debris being removed, and mowed again at desired final height. (This will also reduce power required to mow, reduce wear and tear on the implement drivetrain, spread cut material better, eliminate streaking, and make the final cut more uniform).

- Many varied objects, such as wire, cable, rope, or chains, can become entangled in the operating parts of the implement head. These items could then swing outside the housing at greater velocities than the blades. Such a situation is extremely hazardous and could result in serious injury or even death. Inspect the cutting area for such objects before mowing. Remove any like object from the site. Never allow the cutting blades to contact such items.

- Do not let the blades turn when the implement deck is raised for any reason, including clearance or for turning. Raising the implement deck exposes the cutting blades which creates a potentially serious hazard and could cause serious injury or even death from objects thrown from the blades.

- Do Not operate this equipment in areas where insects such as bees may attack you and/or cause you to lose control of the equipment. If you must enter in such areas, use a tractor with an enclosed cab and close the windows to prevent insects from entering. If a tractor cab is not available, wear suitable clothing including head, face, and hand protection to shield you from the insects. Attacking insects can cause you to lose control of the tractor, which can result in serious injury or death to you or bystanders. Never dismount a moving tractor.

Connecting or Disconnecting Implement Safety

- Always shut the tractor completely down, place the transmission in park, and set the parking brake before you or anyone else attempts to connect or disconnect the implement and tractor hitches.

- DO NOT use a PTO adapter to attach a non-matching implement driveline to a tractor PTO. Use of an adapter can double the operating speed of the implement resulting in excessive vibration, thrown objects, and blade and implement failure. Adapter use will also change the working length of the driveline exposing unshielded driveline areas. Serious bodily injury and/or equipment failure can result from using a PTO adapter. Consult an authorized dealer for assistance if the implement driveline does not match the tractor PTO.

- When attaching the implement input driveline to the tractor PTO, it is important that the connecting yoke spring activated locking collar slides freely and the locking balls are seated securely in the groove on the tractor PTO shaft. A driveline not attached correctly to the tractor PTO shaft could come loose and result in personal injury and damage to the implement.

- Before operating the implement, check to make sure the implement input driveline will not bottom out or become disengaged. Bottoming out occurs when the inner shaft penetrates the outer housing until the assembly becomes solid-it can shorten no more. Bottoming out can cause serious damage to the tractor PTO by pushing the PTO into the tractor and through the support bearings or downward onto the PTO shaft, breaking it off. A broken drive line can cause personal injury.

- On a fully-assembled unit, do not remove the transport bars until hoses are attached to the tractor and the Wing Cylinders are filled with oil. Lower the wings slowly and carefully. Keep bystanders away during operations.

- Never unhitch without using the Tongue Jack. The Tongue is very heavy. Attempting to lift the Tongue without using the Tongue Jack could cause strains or other injury. Allowing the tongue to fall suddenly and unexpectedly could result in crushing injury. Use the Tongue Jack for lifting the implement only. Overloading the Tongue Jack can cause failure with possible serious bodily injury or even death.

- To prevent tipping of implement when stored in folded position, use carrying wheels or adequate stands on center frame.

Transporting Safety

- Only tow the implement behind a properly sized and equipped tractor which exceeds the weight of the implement by at least 20%. DO NOT tow the implement behind a truck or other type of vehicle. Never tow the implement and another implement connected in tandem. Never tow the implement at speeds over 20 MPH.

- Secure the implement for transport before traveling on public roads. For pull-type implements, secure the center axle using cylinder stops or transport pin and properly attach a safety chain between the implement and tractor. Secure wings in upright position on folding implements using wing transport locks.

- Make certain before transporting that a "Slow Moving Vehicle" (SMV) sign is installed in such a way as to be clearly visible and legible. When transporting the implement use the tractor flashing warning lights and follow all local traffic regulations.

- Your driving vision may be reduced or impaired by the tractor, cab, or implement. Before driving on public roadways identify any limited vision areas, and make adjustments to your operating position, mirrors, and the implement transport position so that you can clearly see the area where you will be traveling, and any traffic that may approach you. Failure to maintain adequate vision of the public roadway and traffic can result in serious injury or even death.

- Understand the tractor and implement and how it handles before transporting on streets and highways. Make sure the tractor steering and brakes are in good condition and operate properly.

- Transport only at speeds where you can maintain control of the equipment. Serious accidents and injuries can result from operating this equipment at high speeds. Before transporting the tractor and implement, determine the proper transport speeds for you and the equipment. Make sure you abide by the following rules:

- Test the tractor at a slow speed and increase the speed slowly. Apply the Brakes smoothly to determine the stopping characteristics of the tractor and implement. As you increase the speed of the tractor the stopping distance increases. Determine the maximum transport speed not to exceed 20 mph (30 kph) for towing this equipment.

- Test the equipment at a slow speed in turns. Increase the speed through the turn only after you determine that it is safe to operate at a higher speed. Use extreme care and reduce your speed when turning sharply to prevent the tractor and implement from turning over. Determine the maximum safe turning speed for you and this equipment before operating on roads or uneven ground.

SAFETY SECTION

- Be aware of the operating conditions. Do not operate the tractor with weak or faulty brakes or worn tires. When operating down a hill or on wet or rain slick roads, the braking distance increases: use extreme care and reduce your speed. When operating in traffic always use the tractor's flashing warning lights and reduce your speed. Be aware of traffic around you and watch out for the other guy.

- Turn curves or go up hills only at a low speed and using a gradual steering angle. Rear mounted implements move the center of gravity to the rear and remove weight from the front wheels. Make certain, by adding front ballast, that at least 20% of the tractor's weight is on the front wheels to prevent rearing up, loss of steering control or tractor tip-over.

- When the wings are folded for transport, the center of gravity is raised and the possibility of overturn is increased. Drive slowly and use extreme caution when turning on hillsides. Overturning the implement could cause the implement to overturn the tractor and vice versa resulting in serious injury or even death. Never fold wings on a hillside...the implement may overturn.

- Slow down on rough or uneven surfaces to prevent loss of steering control which could result in property damage or possible injury. Do not transport unless 3-Point lift lever is fully raised and in the latched transport position. Dropping implement in transport can cause serious damage to the tractor and/or implement and possibly cause the operator or others to be injured or killed.

- In wet conditions where there is a likelihood of material collecting on the implement, make certain that excess material is removed before traveling on public roadways.

- Allow sufficient clearance for the implement to swing outward while turning. Implements carried behind the tractor will swing outside the tire path when making turns. Contacting a solid object while turning will cause equipment damage and possible injury.

- Always keep a careful lookout and use extreme care when transporting around overhead obstructions and electrical power lines. The implement wing can be over 10 feet high. Never allow the implement wing to come within 10 feet of any power line.

Maintenance and Service Safety

- Periodically inspect all moving parts for wear and replace when necessary with authorized service parts. Look for loose fasteners, worn or broken parts, and leaky or loose fittings. Make sure all pins have cotter pins and washers. Serious injury may occur from not maintaining this machine in good working order.

- Perform service, repairs and lubrication according to the maintenance section. Ensure the unit is properly lubricated as specified in the lubrication schedule and all bolts and nuts have proper torque. Failure to properly service, repair and maintain this implement in good operating condition could cause component failure and possible serious injury or even death.

SAFETY SECTION

- Use extreme caution when getting onto the implement to perform repairs, maintenance and when removing accumulated material. Only stand on solid flat surfaces to ensure good footing. Use a ladder or raised stand to access high spots which cannot be reached from ground level. Slipping and falling can cause serious injury or death.

- Never work under the implement, the framework, or any lifted component unless the implement is securely supported or blocked up to prevent sudden or inadvertent falling which could cause serious injury or even death.

- Never attempt to lubricate, adjust, or remove material from the implement while it is in motion or while tractor engine is running. Make sure the tractor engine is off, the transmission in park, the parking brake set, and that the key is with you before working on the implement.

- Relieve hydraulic pressure prior to doing any maintenance or repair work on the implement. Place the implement on the ground or securely blocked up, disengage the PTO, and turn off the tractor engine. Push and pull the Remote Cylinder lever in and out several times prior to starting any maintenance or repair work.

- Never interfere with factory-set hydraulic calibrations. Any change in calibration could cause a failure of the equipment and may result in injury.

- Always disconnect the main PTO Driveline from the tractor before performing service on the implement. Never work on the implement with the tractor PTO driveline connected and running. Rotating Parts, blades or drivelines could turn without warning and cause immediate entanglement, injury or death.

- DO NOT weld or repair rotating implement components. Welds and other repairs may cause severe vibration and/or component failure resulting in part being thrown from the implement causing serious bodily injury. See your Authorized Dealer for proper repairs.

- DO NOT weld or perform hot work on galvanized implements. Heating/burning of galvanizing material may release fumes which can be harmful to your health.

- Do not modify or alter this implement. Do not permit anyone to modify or alter this implement, any of its components or any implement function.

Parts Information

- Modern Ag implements use balanced and matched system components for blade carriers, blades, cutter shafts, knives, knife hangers, rollers, drivetrain components, and bearings. These parts are made and tested to Modern Ag specifications. Always replace blades with original equipment manufacturer balanced blade sets. Non-genuine “will fit” parts do not consistently

meet these specifications. The use of “will fit” parts may reduce implement performance, void warranties, and present a safety hazard. Use genuine Modern Ag implement parts for economy and safety.

Safety Signs/Decals

- Modern Ag supplies safety decals on this product to promote safe operation. Damage to the decals may occur while in shipping, use, or reconditioning. Always maintain the safety signs in good readable condition. If the safety signs are missing, damaged, or unreadable, obtain and install replacement safety signs immediately.

Concluding Safety Instructions and Practices

- In addition to the design and configuration of this implement, including safety signs and safety equipment, hazard control and accident prevention are dependent upon the awareness, concern, prudence, and proper training of personnel involved in the operation, transport, maintenance, and storage of the machine. Refer also to safety guidelines and operation instruction in each of the appropriate sections of the tractor and equipment manuals. Pay close attention to the Safety Signs affixed to the tractor and equipment.

SAFETY DECAL PLACEMENT

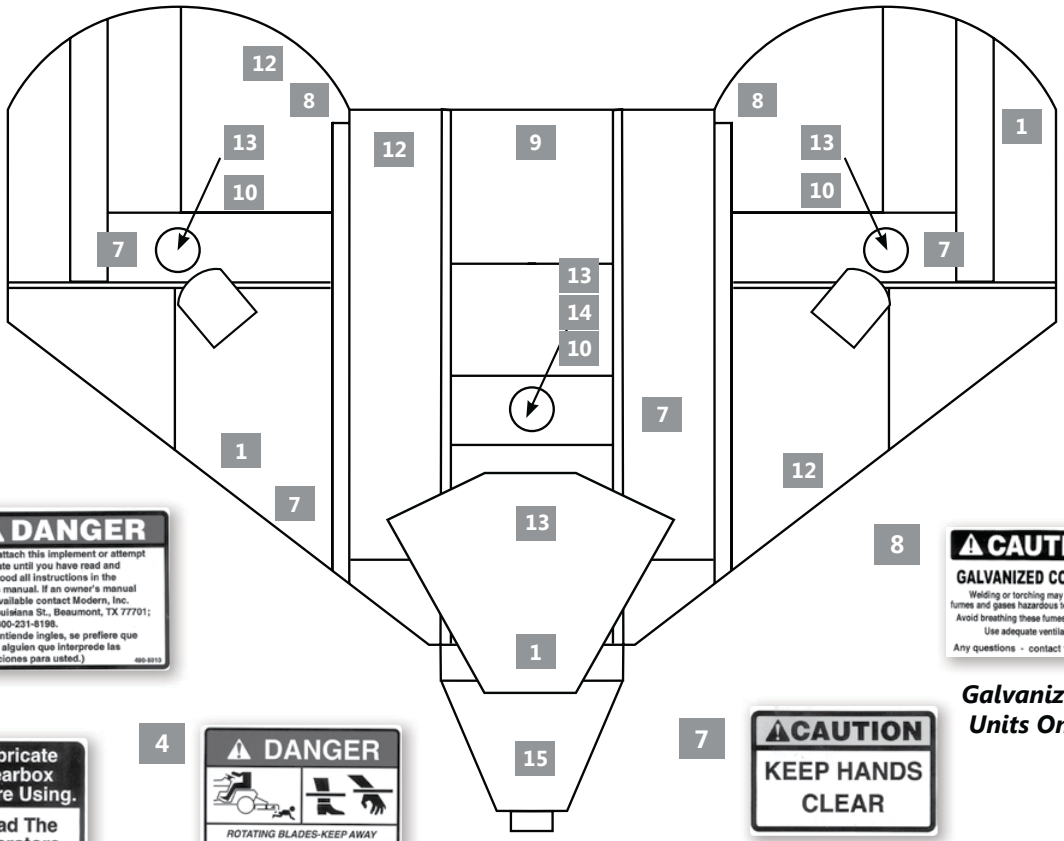

1

8

Galvanized Units Only

2

4

7

6

9

3

5

11

10

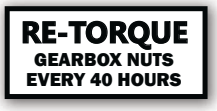

14

ITEM	PART NO.	DESCRIPTION	QTY.
.....	490-9000	COMPLETE DECAL SHEET	1
1		DO NOT ATTACH	1
2		LUBRICATE GEARBOX	1
3		THROWN OBJECTS	1
4		ROTATING BLADES	1
5		ROTATING DRIVELINE	2
6		WARNING TO PREVENT INJURY	1
ADDITIONAL SAFETY DECALS BELOW			
7	490-1024	KEEP HANDS CLEAR	1
8	490-GALVCOAT	CAUTION: GALV COATING	1
9	490-5009	REPLACE SHIELDS	1
10	490-2010	RETORQUE GEARBOX	1
11	490-1022	CAUTION REPLACE SHIELDS	1

MORE DECALS ON NEXT PAGE

**** Safety decals item #1 - 6 are sold in complete sets only. Additional safety decals item #7-10 can be purchased separately. See next page for additional cutter decals.***

ADDITIONAL CUTTER DECALS

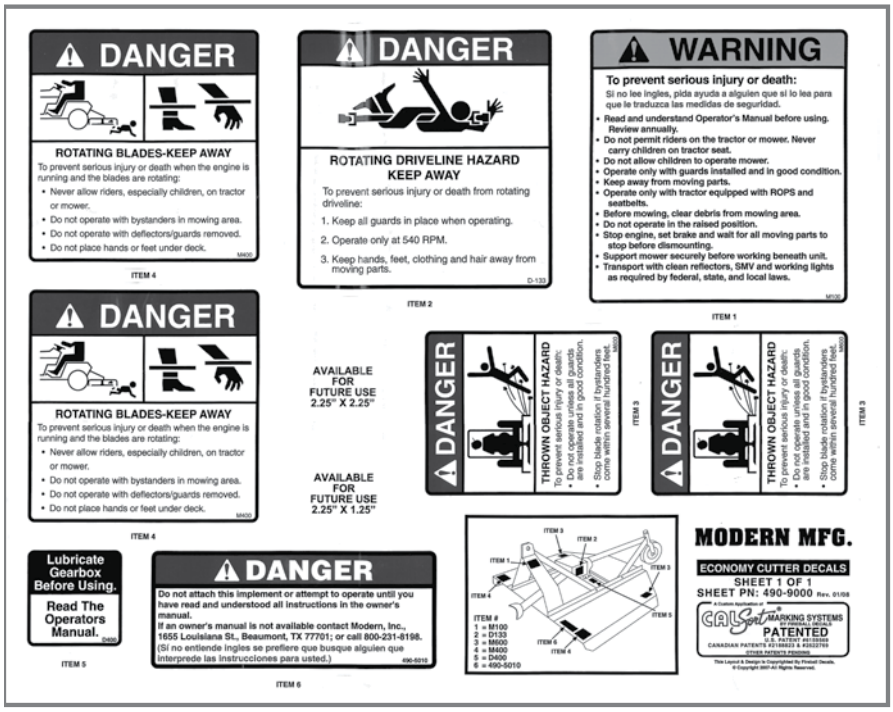

490-9000 Decal Sheet contains:

(1) Warning: To Prevent Injury

(2) Rotating Blades Keep Away

(1) Rotating Driveline Hazard

(1) Danger: Read Operator Manual

(1) Thrown Object Hazard

(1) Lubricate Gearbox

Cutter Size Decals

490-1115

490-2003

490-EAGLE

490-1031

BLUE

490-1023

490-1000

490-FEMA

ITEM	PART NO.	DESCRIPTION	QTY.
12	490-1501	DANGER: LOWERING WING	2
13	490-1018	WARNING: NO LUBE.	3
14	490-4009	540 RPM	1
14A	490-4100	1000 RPM	1
15	490-9020	TYPICAL SET-UP	1

OPERATION SECTION

OPERATION INSTRUCTIONS

Our rotary cutters are manufactured with quality material by skilled workers. These cutters are designed to cut grass, weeds, crop stalks, brush and other vegetation up to 3 1/2" diameter. The cutter is equipped with protective deflectors and/or chain guards to prevent objects being thrown from the cutter by the blades, however, no shielding is 100% effective. All shields, guards, deflectors, and chains equipped on the unit must be maintained on the cutter in good operational condition.

It is the operator's responsibility to be knowledgeable of all potential operating hazards and to take every reasonable precaution to ensure oneself, others, animals, and property are not injured or damaged by the cutter, tractor, or a thrown object. Do not operate the cutter if passersby, pets, livestock, or property are within 300 feet of the unit.

This section of the Operator's Manual is designed to familiarize, instruct, and educate safe and proper cutter use to the operator. Pictures contained in this section are intended to be used as a visual aid to assist in explaining the operation of a flex-wing rotary cutter and are not necessarily of all cutters. Some pictures may show shields removed for picture clarity. NEVER OPERATE this implement without all shields in place and in good operational condition. The operator must be familiar with the cutter and tractor operation and all associated safety practices before operating the cutter and tractor. Proper operation of the cutter, as detailed in this manual, will help ensure years of safe and satisfactory use of the cutter.

IMPORTANT: To avoid cutter damage, retorque all bolts after the first 10 hours of operation. Retighten blade carrier retaining nut on gearbox lower shafts to 450 ft. lbs.

READ AND UNDERSTAND THE ENTIRE OPERATING INSTRUCTIONS AND SAFETY SECTION OF THIS MANUAL AND THE TRACTOR MANUAL BEFORE ATTEMPTING TO USE THE TRACTOR AND Cutter. If you do not understand any of the instructions, contact your nearest authorized dealer for a full explanation. Pay close attention to all safety signs and safety messages contained in this manual and those affixed to the cutter and tractor.

READ, UNDERSTAND, and FOLLOW the following Safety Messages. Serious injury or death may occur unless care is taken to follow the warnings and instructions stated in the Safety Messages. Always use good common sense to avoid hazards.

PELIGRO

Si no lee ingles, pida ayuda a alguien que si lo lea para que le traduzca las medidas de seguridad.

15 FT DRAGON PREDATORRR & SUPER PREDATORRR STANDARD EQUIPMENT AND SPECIFICATIONS

Cutting Width	180″
Transport Width	90″
Overall Width	187″
Overall Length	180″
Cutting Height	2″-15″
Blade Overlap	6″
Wing Lift Hydraulics	Standard
Wing Flex	90° Up/22° Down
Jackstand	Standard
Hitch	Swivel Clevis
Blade Carrier	Pan Stump Jumpers
Horsepower Required (min)	50 hp-75hp
Gearbox Rating:	
Main Gearbox or Divider Box	255 hp
Outboard Gearbox or Center & Wings	210 hp
Output Shaft Diameter	2-3/8″ or 2″
Cut Capacity	3-1/2″
Blade Tip Speed:	
Main or Center	540. . . . . 15,268 FPM
	1000 . . . . . 15,072 FPM
Wings	540. . . . . 15,016 FPM • 14,821 FPM (Dragon)
	1000 . . . . . 14,996 FPM • 14,946 FPM (Dragon)
Driveline Size:	
Main	Cat. 5 Constant Veloc.
Outboard Center or Wings	Cat. 4 w/Slip Clutch
Deck Thickness	3/16″
Side Skirt	1/4″ x 10 1/4″
Replaceable Skid Shoes	Standard
Safety Chains	Standard (Front & Rear) (Super) • Option (Dragon)
Weight (Approx)	5900 lbs. • 5600 lbs. (Dragon)
Galvanized Deck & Frame	Standard
Standard Tires	Used Aircraft Tires (Super) • Laminate (Dragon)
Dual Tailwheels	Standard (Super) • Option (Dragon)
Hydraulic Level Lift	Standard (Super) • Option (Dragon)
Deck Rings to Protect Deck	Standard (Super)

Front chains and rear rubber guards are standard equipment. Single and rear chain guards are available as extra equipment at extra cost. Modern recommends cutters be equipped with deflectors or chain guards for all mowing purposes.

OPERATOR REQUIREMENTS

Safe operation of the unit is the responsibility of a qualified operator. A qualified operator has read and understands the implement and tractor Operator's Manuals and is experienced in implement and tractor operation and all associated safety practices. In addition to the safety messages contained in this manual, safety decals are affixed to the implement and tractor. If any part of the operation and safe use of this equipment is not completely understood, consult an authorized dealer for a complete explanation.

If the operator cannot read the manuals for themselves or does not completely understand the operation of the equipment, it is the responsibility of the supervisor to read and explain the manuals, safety practices, and operating instructions to the operator.

Safe operation of equipment requires that the operator wear approved Personal Protective Equipment (PPE) for the job conditions when attaching, operating, servicing, and repairing the equipment. PPE is designed to provide operator protection and includes the following safety wear:

PERSONAL PROTECTIVE EQUIPMENT (PPE)

- Protective Eye Glasses, Goggles, or Face Shield
- Hard Hat
- Steel Toe Safety Footwear
- Gloves
- Hearing Protections
- Close Fitting Clothing
- Respirator or Filter Mask (depends on mowing conditions)

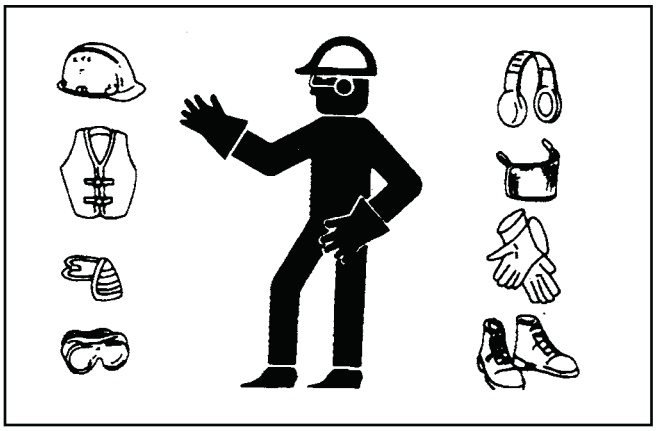

DANGER

NEVER use drugs or alcohol immediately before or while operating the Tractor and Implement. Drugs and alcohol will affect an operator's alertness and coordination and therefore affect the operator's ability to operate the equipment safely. Before operating the Tractor or Implement, an operator on prescription or over-the-counter medication must consult a medical professional regarding any side effects of the medication that would hinder their ability to operate the Equipment safely. NEVER knowingly allow anyone to operate this equipment when their alertness or coordination is impaired. Serious injury or death to the operator or others could result if the operator is under the influence of drugs or alcohol.

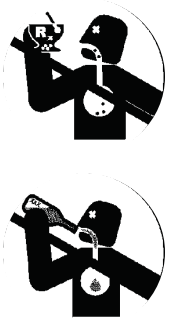

TRACTOR REQUIREMENTS

The tractor used to operate the cutter must have the power capacity to lift, pull, and operate the Power Take Off (PTO) at the cutter's rated speed while traveling at a ground speed between 2 and 5 MPH. Operating the cutter with a tractor that does not meet the following requirements may cause tractor or cutter damage and be a potential danger to the operator and passersby.

Tractor Requirements and Capabilities

- ASAE approved Roll-Over Protective Structure (ROPS) or ROPS cab and seat belt.
- Tractor Safety Devices ..... Slow Moving Vehicle (SMV) emblem, lighting, PTO master shield
- Tractor Horsepower - Minimum ..... 50HP - 70HP
- Maximum ..... 540 RPM Unit-120 HP; 1000 RPM Unit 140 HP
- Drawbar..... Set length according to operating speed of the cutter and driveline type, rated to carry weight of the cutter, safety chain attachment point
- Hydraulics ..... Minimum of 1 hydraulic port (extra 3-spool valve required). Minimum 2 ports, 3 ports recommended if additional, 3-spool control valve is not used.
- Front End Weights..... As needed to maintain 20% weight on front axle
- Power Take Off .....Operating speed and shaft size depends on operating speed and driveline type of the cutter.
- Tire Wheel Spacing ..... Set tires minimum width of 60" from inside to inside of tires.

ROPS and Seat Belt

The tractor must be equipped with a Roll-Over-Protective-Structure (ROPS) (tractor cab or roll-bar) and seat belt to protect the operator from falling off the tractor, especially during a roll over where the driver could be crushed and killed. Only operate the tractor with the ROPS in the raised position and seat belt fastened. Tractor model not equipped with a ROPS and seat belt should have these life saving features installed by an authorized dealer.

⚠ WARNING

Operate this Equipment only with a Tractor equipped with an approved rollover-protective system (ROPS). Always wear seat belts. Serious injury or even death could result from falling off the tractor--particularly during a turnover when the operator could be pinned under the ROPS.

Tractor Safety Devices

If transporting or operating the tractor and cutter near a public roadway, the tractor must be equipped with proper warning lighting and a Slow Moving Vehicle (SMV) emblem which are clearly visible from the rear of the unit. Lights and a SMV emblem must be equipped directly on implements if the visibility of the tractor warning signals are obscured. Maintain all manufacturer equipped safety shields and guards. Always replace shields and guards that were removed for access to connect, service, or repair the tractor or cutter. Never operate the tractor PTO with the PTO master shield missing or in the raised position.

Tractor Horsepower

The horsepower required to operate the cutter depends on several operating factors including the vegetation to be cut, terrain condition, operator experience, condition of the cutter and tractor, and others. For most mowing conditions, the Predatorrr cutter requires a tractor with a minimum of 50-75 HP. Operating the cutter with a tractor that does not have adequate power may damage the tractor engine. Exceeding 100 HP for a 540 RPM drive and 140 HP for a 1000 RPM drive may cause cutter damage by overpowering the unit in heavy cutting conditions.

Drawbar

Constant Velocity and Standard Driveline.

Position the length of the drawbar from the end of the tractor PTO shaft to the drawbar hitch hole according to the operating speed of the cutter. If the cutter is a 540 RPM unit, position the drawbar length from shaft end to hitch hole at 14". For 1000 RPM cutters, set the drawbar length at 16" for 21 spline 1-3/8" cutters and at 20" for 1-3/4" 20 spline cutters.

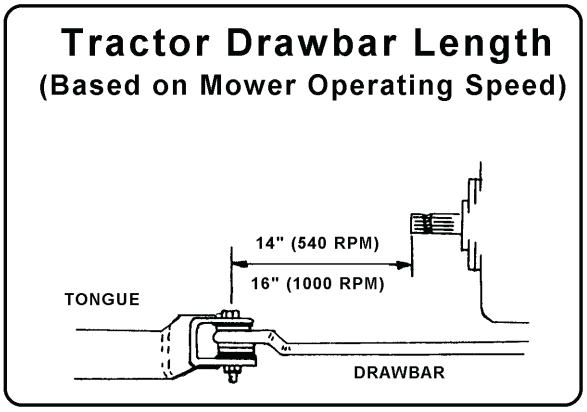

Tongue style may vary

Tractor Hydraulics

The cutter center section and each wing are positioned with hydraulic cylinders that are operated by the tractor hydraulic pump. The tractor must have a minimum of 2 hydraulic control valves devoted to the cutter unless the tractor is fitted with a 3-spool control valve (extra equipment).

A 3-spool control valve is required if the tractor is equipped with a single valve and is recommended for those with two valves so that the center section and each wing can be controlled independent of one another. Refer to the Assembly Section of this manual for properly equipping the tractor with a 3-spool control valve. Tractors equipped with three hydraulic ports can position the center section and each wing independently with no extra equipment. If the tractor is equipped with only two hydraulic ports and a 3-spool control valve is not used, the wings cannot be operated independently and will raise and lower at different speeds.

Front End Weight

A minimum of 20% total tractor weight must be maintained on the tractor front end at all times. Front end weight is critical to maintain steering control and to prevent the tractor from rearing up while driving. If the front end is too light, add weight until a minimum of 20% total weight is reached on the front tires. Front weights and weight carriers can be purchased through an authorized tractor dealership.

Power Take Off (PTO)

Depending on the unit, the cutter is designed to operate at a PTO speed of 540 or 1000 RPM. Most tractors operate at either 540, or a combination of 540 and 1000 RPM PTO speeds. The operating speed of the cutter and tractor can be determined by the number of splines on the driveline yoke and PTO output shaft. Those operating at 540 RPM will have a 6-spline shaft and those operating at 1000 RPM will have a 21-spline shaft.

Note: The cutter will not operate on tractors equipped with a 1000 RPM 20-spline, 1-3/4" shaft. Refer to the tractor owner's manual for instructions to change PTO speeds on models that operate at more than one speed.

If operating an older model tractor where the tractor's transmission and PTO utilize one master clutch, an over-running clutch must be used between the PTO output shaft and the driveline of the cutter. An authorized tractor dealer can provide the over-running clutch and its installation if needed.

DANGER

DO NOT use a PTO adapter to attach a non-matching Implement driveline to a Tractor PTO. Use of an adapter can double the operating speed of the Cutter resulting in excessive vibration, thrown objects, and blade and cutter failure. Adapter use will also change the working length of the driveline exposing un-shielded driveline areas. Serious bodily injury and/or equipment failure can result from using a PTO adapter. Consult an authorized dealer for assistance if the Implement driveline does not match the Tractor PTO.

WARNING

Never operate the Tractor and Cutter if the Implement input driveline is directly connected to the Tractor transmission. Tractor braking distances can be substantially increased by the momentum of the rotating Cutter blades driving the Tractor transmission even though the Tractor clutch has been disengaged. Install an over running clutch between the Tractor PTO and the Cutter driveline to prevent this potentially dangerous situation.

Tire Spacing

Tractor tires should be set a minimum of 60" apart measured from inside of tire to inside of tire. Refer to the tractor Operator's Manual or consult an authorized dealer for instructions to change tractor tire spacing.

GETTING ON AND OFF THE TRACTOR

Before getting onto the tractor, the operator must read and completely understand the implement and tractor operator manuals. If any part of either manual is not completely understood, consult an authorized dealer for a complete explanation.

WARNING

Do not mount the Tractor while the tractor is moving. Mount the Tractor only when the Tractor and all moving parts are completely stopped.

Boarding the Tractor

Use both hands and equipped handrails and steps for support when boarding the tractor. Never use control levers for support when mounting the tractor. Seat yourself in the operator's seat and secure the seat belt around you.

Never allow passengers to ride on the tractor or attached equipment. Riders can easily fall off and be seriously injured or killed from falling off and being run over. It is the operator's responsibility to forbid all extra riders at all times.

DANGER

Never allow children to operate, ride on, or come close to the Tractor or Implement.

DANGER

Never allow children or other persons to ride on the Tractor or Implement. Falling off can result in serious injury or death.

Dismounting the Tractor

Before dismounting, park the tractor and implement on a reasonably level surface, apply the parking brake, idle the engine down, disengage the PTO, and lower the implement to the ground. Shut down the tractor engine according to the operator's manual, remove the key, and wait for all motion to completely stop. Never leave the seat until the tractor, its engine and all moving parts have come to a complete stop.

Use hand rails and steps when exiting the tractor. Be careful of your step and use extra caution when mud, ice, snow or other matter has accumulated on the steps or hand rails. Use all handrails and steps for support and never rush or jump off the tractor.

DANGER

BEFORE leaving the tractor seat, always engage the brake and/or set the tractor transmission in parking gear, disengage the PTO, stop the engine, remove the key, and wait for all moving parts to stop. Place the tractor shift lever into a low range or parking gear to prevent the tractor from rolling. Never dismount a Tractor that is moving or while the engine is running. Operate the Tractor controls from the tractor seat only.

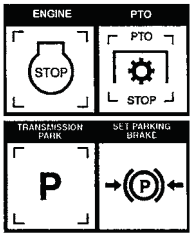

STARTING THE TRACTOR

The operator must have a complete understanding of the placement, function, and operational use of all tractor controls before starting the tractor. Review the tractor operator's manual and consult an authorized dealer for tractor operation instructions if needed.

Essential Tractor Controls:

- Locate the light control lever.
- Locate the engine shut off control.
- Locate the brake pedals and the clutch.
- Locate the PTO control.
- Locate the 3-point hitch control lever.
- Locate the hydraulic remote control levers.

Before starting the tractor ensure the following:

- Conduct all pre-start operation inspection and service according to the tractor operator's manual.
- Make sure all guards, shields, and other safety devices are securely in place.
- The parking brake is on.
- The PTO control lever is disengaged.
- The 3-point hitch control lever is in the lowered position.
- The hydraulic remote control levers are in the neutral position.
- The tractor transmission levers are in park or neutral.

Refer to the tractor owner's manual for tractor starting procedures. Only start the tractor while seated and belted in the tractor operator's seat. Never bypass the ignition switch by short circuiting the starter solenoid. After the tractor engine is running, avoid accidental contact with the tractor transmission to prevent sudden and unexpected tractor movement.

⚠ DANGER

Never run the Tractor engine in a closed building or without adequate ventilation. The exhaust fumes can be hazardous to your health.

Start tractor only when properly seated in the Tractor seat. Starting a tractor in gear can result in injury or death. Read the Tractor operators manual for proper starting instructions.

CONNECTING THE CUTTER TO THE TRACTOR

Use extreme caution when connecting the cutter to the tractor. The cutter should be securely resting at ground level or setting on blocks. Keep hands and feet from under the cutter deck and clear of pinch points between the tractor hitch arms and cutter pins.

⚠ DANGER

Always shut the Tractor completely down, place the transmission in park, and set the parking brake before you or anyone else attempts to connect or disconnect the Implement and Tractor hitches.

Connecting the Cutter Tongue to the Tractor

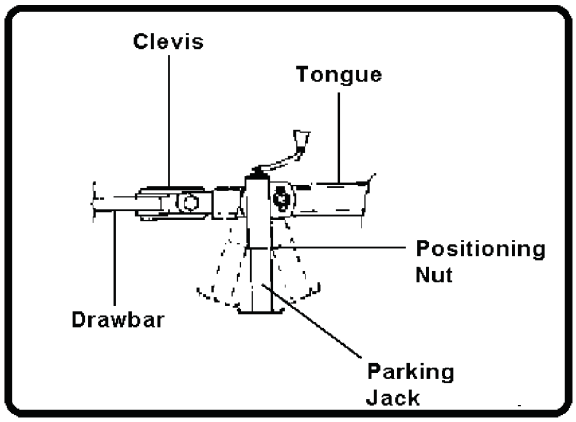

1. Ensure the tractor is equipped with the correct PTO shaft and the drawbar is set at the correct length.
2. Using the parking jack, position the tongue clevis to the height of the tractor drawbar. Adjust the cutter tongue to be level and parallel with the tractor drawbar using the control rod connecting the cutter tongue to the deck.
3. Board the tractor and start the engine. Back the tractor to the cutter aligning the drawbar hitch hole with the cutter tongue clevis. Turn off the tractor engine, place the tractor in park, and set the parking brake before dismounting.
4. To attach the cutter, place two 1″ flatwashers positioned under top lip of tongue clevis and to the top of drawbar. Add additional 1″ flatwashers between the bottom of drawbar and bottom lip of clevis to fill open space. Insert a 1″ diameter grade 5 or 8 bolt through clevis and drawbar and retain in position with a 1″ locknut. Tighten the locknut securely but do overtighten which could spring or break the clevis. NEVER attach the cutter to the tractor with a pin not having a nut.
5. Securely attach the cutter safety chain to the tractor drawbar or drawbar support frame.
6. Lower the jack until the tongue is completely supported by the drawbar. Remove jack from the tongue and place on storage bracket of cutter.

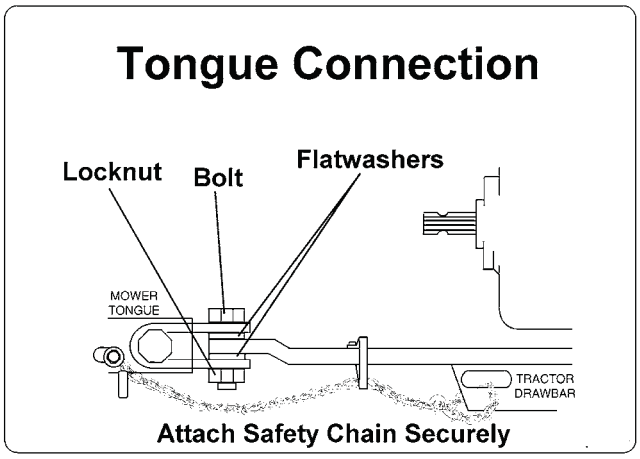

Tongue style may vary

Safety Tow Chain

If the cutter is towed on a public roadway, a safety chain with tensile strength equal to or greater than the gross weight of the cutter must be connected between the tractor and cutter. This will help control the implement in the event the tongue becomes disconnected from the drawbar. After connecting both ends of the safety chain, drive the tractor to the right and left to check for proper chain length. Adjust length as necessary and allow only enough slack in the chain to make a maximum turn in both directions.

Connecting Cutter Hydraulic Lines to the Tractor

With the tractor shut down and secured in position, relieve hydraulic pressure from the tractor by moving the control levers back and forth several times or placing the levers in the float position.

When connecting the cutter hydraulic lines, keep hoses, quick couplers, and swivels free of contamination. Never leave a disconnected hose end open and cap the tractor hydraulic outlet ports when not in use. If the tractor ports or cutter hydraulic hose ends become contaminated, wipe clean with a rag before connecting.

Operating Cutter Hydraulics with Three Tractor Hydraulic Ports

Connect one hose into each hydraulic port. Connect lines to correspond with position of hydraulic control levers.

Operating Cutter Hydraulics with Two Tractor Hydraulic Ports

The lines that operate the wings must be plumbed together and will be controlled using one hydraulic control valve and the center section with the remaining control valve. Ensure that the operator is aware that each wing cannot be controlled independently nor will they raise and lower simultaneously.

Operating the Cutter Hydraulics with a 3-Spool Hydraulic Control Valve (Extra Equipment)

Ensure the valve matches the hydraulic operating system of the tractor (open or closed center). Refer to the Assembly Section for additional information on equipping the tractor with a 3-spool control valve.

Mount the valve bank to a tractor fender or other accessible location. Connect valve bank inlet and outlet lines to outlets of the same tractor hydraulic port. Connect the cutter hydraulics to the control valve bank with the center section line to the right port. Connect the wing cylinder lines to the control valve positioned to correspond with the left and right wing.

To activate the 3-spool hydraulic control valve, tie the tractor's hydraulic control lever back to keep hydraulic oil continuously fed to the valve bank.

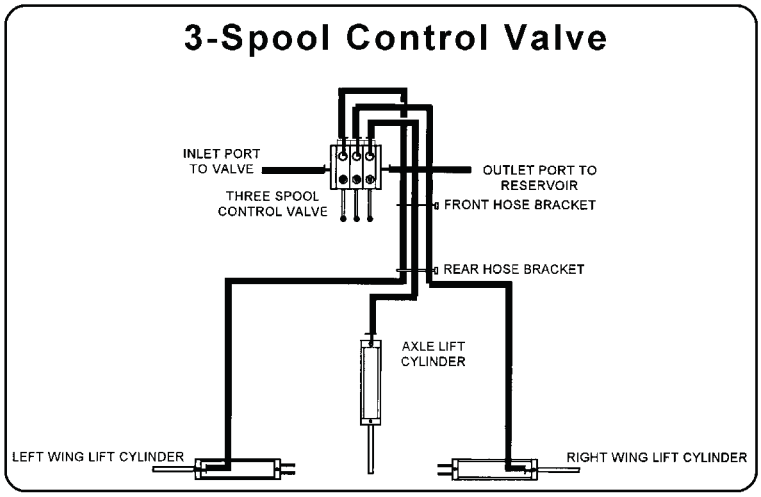

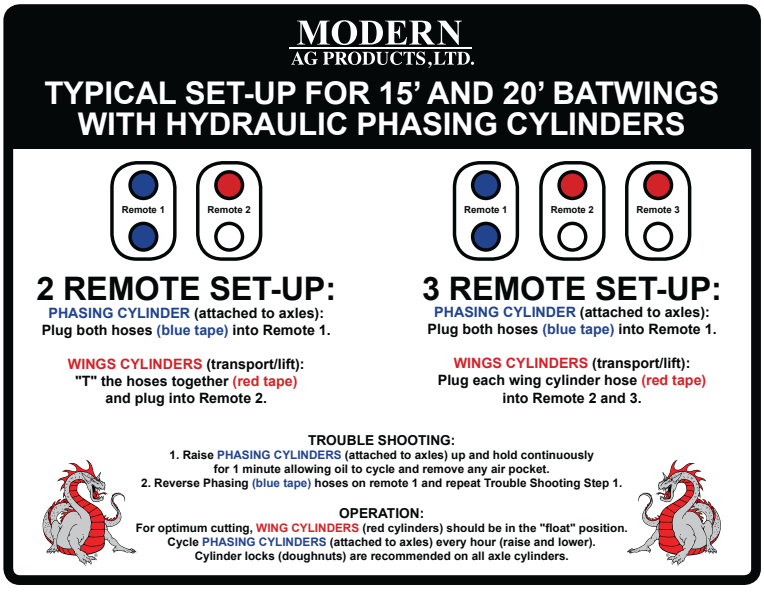

Hydraulic Line Support

After connecting the cutter hydraulic lines to the tractor, support the hoses with the equipped brackets. Ensure that hoses do not contact the driveline, do not bind while turning, and do not become pinched or kinked.

Hydraulic Cylinder Priming

Hydraulic Cylinders must be filled with hydraulic oil before removing the wing transport braces to lower the cutter wings. Hydraulic cylinders and lines are filled by holding the valve control levers in the raised position until the cylinders fully retract (wing cylinders) and extend (center cylinder). Place control levers in the float position and repeat process a second time. Ensure wings are entirely supported by the cylinders before removing the transport braces. NEVER drive out bar pins and NEVER remove braces that have tension on them.

SETTING THE CUTTER

Properly setting the cutting height is essential for efficient and safe operation. A properly set cutter will make a more uniform cut, distribute clippings more evenly, require minimal tractor work, and follow the contour of uneven terrain. NOTE: Avoid very low cutting heights, striking the ground with the blades gives the most damaging shock loads and will cause damage to the cutter and drive. Blades contacting the ground may cause objects to be thrown out from under the cutter deck. Always avoid operating the cutter at a height which causes the blades to contact the ground.

⚠ DANGER

Never work under the Implement, the framework, or any lifted component unless the Implement is securely supported or blocked up to prevent sudden or inadvertent falling which could cause serious injury or even death.

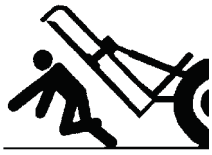

Setting Deck Height

LEVELING DECK CENTER SECTION

1. Place the tractor and cutter on a level surface and lower both wings.
2. Using the center section hydraulic cylinder, position the cutter so the skid shoes are 1" less off the ground than the desired final cut height. For example, for a 3" cut raise or lower the cutter until the skid shoes are approximately 2" off the ground.
3. Shut down the tractor, place the transmission in park, and set the parking brake before dismounting.
4. Level the cutter deck front to rear by adjusting the leveling rods linking the tongue to the rear axle. DO NOT allow feet or other body part underneath the cutter when making adjustments. To adjust rod length, loosen jamnut and screw turnbuckles. To lower the front, lengthen the rods and to raise the front, shorten the rods. DO NOT unscrew turnbuckles to the point that either rod threaded ends becomes disconnected which will cause the cutter to fall. Re-tighten jamnuts when deck is leveled.

5. IMPORTANT: Alternate adjustments between rods and adjust at equal lengths to maintain equal tension. Improper adjustments may cause rods to snap or bend.
6. Place split collar assemblies on the center axle hydraulic cylinder rod to maintain a set cutting height each time the cutter is raised and lowered.

Properly setting the cutting height is essential for efficient and safe operation. A properly set cutter will make a more uniform cut, distribute clippings more evenly, require minimal tractor work, and follow the contour of uneven terrain. Note: Avoid very low cutting heights, striking the ground with the blades gives the most damaging shock loads and will cause damage to the cutter and drive. Blades contacting the ground may cause objects to be thrown out from under the cutter deck. Always avoid operating the cutter at a height which causes the blades to contact the ground.

SETTING THE DECK HEIGHT

1. Place the tractor and cutter on a level surface and lower both wings.
2. Using the center section hydraulic cylinder, position the cutter so the skid shoes are 1" less off the ground than the desired
   final cut height. For example, for a 3" cut raise or lower the
   cutter until the skid shoes are approximately 2" off the ground.
3. Shut down the tractor, place the transmission in park and set the parking brake before dismounting.
4. Level the cutter deck front to rear by adjusting the leveling rods linking the tongue to the rear axle. DO NOT allow feet or other body parts underneath the cutter when making adjustments. To adjust rod length, loosen jamnut and screw ratchets. To lower the front, lengthen the rods and to raise the front, shorten the rods.
   DO NOT unscrew ratchets to the point that either rod threaded ends becomes disconnected which will cause cutter to fail. Re-tighten jamnuts when deck is leveled.
   IMPORTANT: Alternate adjustments between rods and
   adjust at equal lengths to maintain equal tension. Improper
   adjustments may cause rods to snap or bend.
5. Place split collar assemblies on the center axle hydraulic cylinder rod to maintain a set cutting height each time the cutter is raised and lowered.

If wing(s) are not level (parallel to center section), back jamnut off and adjust ratchet shorter to raise the wing outside edge and longer to lower the wing outside edge. It may be necessary to use wing lift cylinder to relieve pressure from the linkage retaining pin.
Tighten jamnut when complete.

⚠ WARNING

To avoid serious injury or death: operating cutter with rear lowered excessively will result in an uneven cut and could cause rapid blade, skid and driveline wear and possibly cause structural failures in the wing hinge area.

DRIVELINE ATTACHMENT

The driveline yoke and tractor PTO shaft must be dirt free and greased for attachment.

To connect the cutter driveline to the tractor PTO output shaft, pull the driveline yoke collar back and align the grooves and splines of the yoke with those of the PTO shaft. Push the driveline yoke onto the PTO shaft, release the locking collar, and position the yoke until the locking collar balls are seated onto the PTO shaft. Push and pull the driveline back and forth several times to ensure a secure attachment.

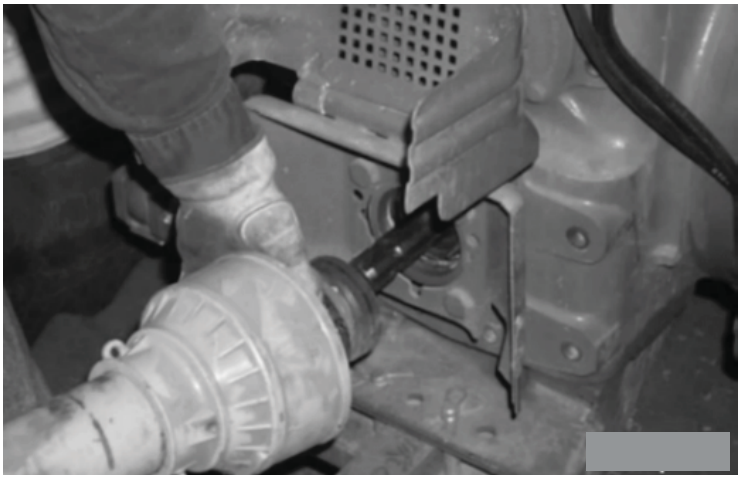

⚠ WARNING

When attaching the Implement input driveline to the Tractor PTO, it is important that the connecting yoke spring activated locking collar slides freely and the locking balls are seated securely in the groove on the Tractor PTO shaft. A driveline not attached correctly to the Tractor PTO shaft could come loose and result in personal injury and damage to the Implement.

Driveline Length Check

WARNING

Before operating the Implement, check to make sure the Implement input driveline will not bottom out or become disengaged. Bottoming out occurs when the inner shaft penetrates the outer housing until the assembly becomes solid-it can shorten no more. Bottoming out can cause serious damage to the Tractor PTO by pushing the PTO into the Tractor and through the support bearings or downward onto the PTO shaft, breaking it off. A broken drive line can cause personal injury.

When fitting the cutter to the tractor, the telescoping driveline must be inspected to ensure that at its most compressed position, the profiles do not "bottom out", and when at its farthest extended position, there is sufficient engagement between the profiles to operate safely. At its shortest length, there must be at least a 1" clearance between each profile end and opposite profile universal joint. At its farthest operating extension, a minimum profile engagement of 12" must be maintained for a Constant Velocity (CV) tube type driveline and a minimum engagement of 6" for non-CV solid shaft drivelines.

"Bottoming Out" Check Procedure

- Disconnect driveline from the tractor and slide the profiles together until fully compressed.
- Place a mark on the inner shield 1/8" from the end of the outer shield and reattach the driveline to the PTO shaft.
- With the PTO NOT TURNING, slowly drive the tractor with cutter attached through the sharpest turn possible and watch shaft movement. With the PTO NOT TURNING, slowly drive the tractor with the cutter attached through the most severe terrain conditions expected and watch shaft movement.
- If the distance between the mark and the outer shield becomes less than 2" at any point there is a potential problem bottoming out the driveline and the driveline should be shortened.

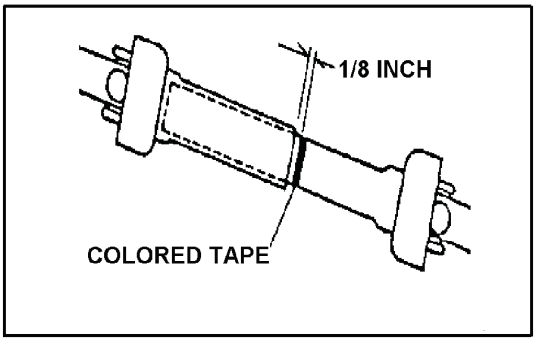

Driveline in maximum compressed position

Shorten the driveline profiles as follows:

- Remove the driveline from the tractor.
- Position the cutter to the point with the shortest distance between the tractor PTO shaft and cutter gearbox. Shut down the tractor and securely block the cutter in this position.
- Pull driveline apart and reattach yoke to PTO shaft.
- Hold driveline sections parallel to one another and measure back 1" from yoke of each shaft and place mark on opposite section. Cut this length off with a saw.
- Round off all sharp edges and debur.
- Thoroughly grease then reinstall the driveline.
- Recheck for proper operation.

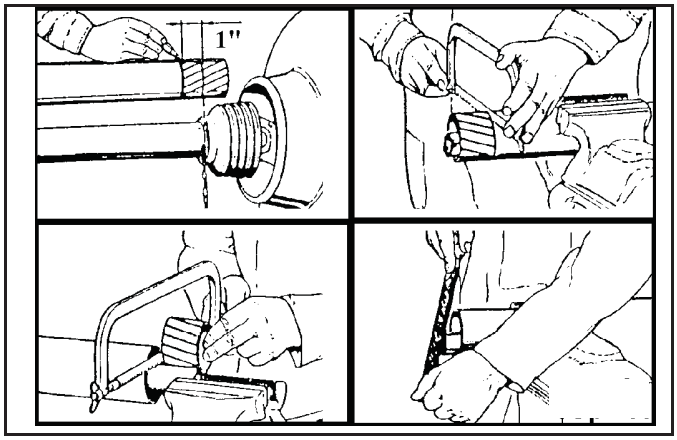

Engagement Check Procedure

- With the driveline attached, position the cutter to the point where the telescoping driveline is at its maximum extension. Completely shut down the tractor and secure in position.
- Mark the inner driveline shield 1/8" from the end of the outer shield.
- Disconnect the driveline from the tractor and separate the two driveline halves.
- Measure the distance from the mark to the end of the inner profile. This length is the amount the driveline profiles were engaged.
- If the engaged length is less than 12" for a CV driveline and less than 6" for a non-CV Driveline, the shaft is considered too short and should be replaced with a longer shaft. Consult an authorized dealer to purchase the required driveline length.

NOTE: If the driveline cannot be shortened and still maintain the required profile engagement, the operator must be made aware of terrain conditions and avoid situations which pose a potential problem to avoid damaging the driveline.

Constant Velocity (CV) Driveline

For cutters equipped with a Constant Velocity (CV) driveline, the maximum turning angle between the tractor and cutter must be determined to ensure the joint angle does not over-extend which can cause CV joint damage. Constant Velocity joints enable the driveline to operate smoothly with no vibrations and clattering at angles up to 70°. Angles greater than 80° can result in mechanical damage to the CV joint and cutter driveline.

The Constant Velocity joint must be lubricated every 8 hours of operation as specified in the Maintenance Section. Failure to properly lubricate the joint will result in accelerated wear and joint component failure.

CV Driveline Maximum Angle Check Procedure

- With the cutter attached to the tractor and the driveline disconnected from the tractor PTO stub make a hard left turn until there is approximately a 1" clearance between the left rear tractor tire and cutter frame or tongue.
- Stop and completely shut down the tractor. Place the tractor in Park and apply the Parking Brake before dismounting.
- Check the CV joint at this maximum turning radius by holding the driveline yoke above the PTO shaft andthen angle the CV joint to its maximum angle. A minimum difference of 10 degrees between the center line of the yoke and the PTO shaft must be maintained to en sure the joint will not be over angled. If the joint cannot be angled at least 10°, there is a po tential problem of over-angling the joint while making sharp turns.
- Solutions: To ensure the joint is not damaged, check the following:

Check the drawbar length to ensure that it is at the proper length for the RPM speed of the cutter.

Move the tractor rear tires wider apart to limit the tractor turning radius.
Position the cutter at multiple angles and perform the above procedure. Determine the sharpest turning radius that maintains a safe operating angle and note this position to the operator.

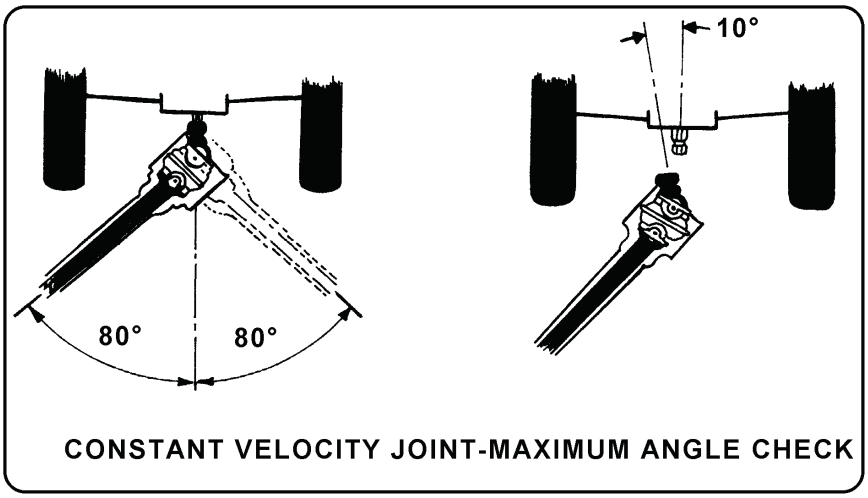

CONSTANT VELOCITY JOINT-MAXIMUM ANGLE CHECK

Do not turn so sharp or lift cutter so high to produce a severe "knocking" of the Driveline which will cause accelerated wear and breakage of drive train components and could result in possible injury from the separated Driveline sections.

PRE-OPERATION INSPECTION AND SERVICE

Before each use, a pre-operation inspection and service of the implement and tractor must be performed. This includes routine maintenance and scheduled lubrication, inspecting that all safety devices are equipped and functional, and performing needed repairs. DO NOT operate the unit if the pre-operation inspection reveals any condition affecting safe operation. Perform repairs and replacement of damaged and missing parts as soon as noticed. By performing a thorough pre-operation inspection and service, valuable down time and repair cost can be avoided.

⚠ DANGER

Always disconnect the main PTO Driveline from the Tractor before performing service on the Implement. Never work on the Implement with the tractor PTO driveline connected and running. Rotating Parts, Blades or Drivelines could turn without warning and cause immediate entanglement, injury or death.

⚠ DANGER

DO NOT allow any person under a folded wing unless wing is securely locked up or supported. DO NOT approach the Implement unless the Tractor is turned off and all motion has ceased. Never work under the frame work, or any lifted component unless the implement is securely supported or blocked up. A sudden or inadvertent fall by any of these components could cause serious injury or even death.

⚠ WARNING

Periodically inspect all moving parts for wear and replace when necessary with authorized service parts. Look for loose fasteners, worn or broken parts, and leaky or loose fittings. Make sure all pins have cotter pins and washers. Serious injury may occur from not maintaining this machine in good working order.

Tractor Pre-Operation Inspection/Service

Refer to the tractor operator's manual to ensure a complete pre-operation inspection and scheduled service is performed according to the manufacturers recommendations. The following are some of the items that require daily service and inspection:

- Tire condition/air pressure
- Wheel lug bolts
- Steering linkage
- PTO shield
- SMV sign is clean and visible
- Tractor's lights are clean and functional
- Tractor Seat belt is in good condition
- Tractor ROPS is in good condition
- ROPS is in the raised position
- No tractor oil leaks
- Radiator free of debris
- Engine oil level and condition
- Engine coolant level and condition
- Power brake fluid level
- Power steering fluid level
- Fuel condition and level
- Sufficient lubrication at all lube points
- Air filter condition

Cutter Pre-Operation Inspection/Service

Before each cutter use, a complete inspection and service is required to ensure the cutter is in a good and safe working condition. Damaged and/or broken parts should be repaired and/or replaced immediately. To ensure the cutter is ready for operation, conduct the following.

⚠ DANGER

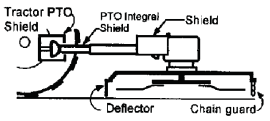

All Safety Shields, Guards and Safety devices including (but not limited to) - the Deflectors, Chain Guards, Steel Guards, Gearbox Shields, PTO integral shields, and Retractable Door Shields should be used and maintained in good working condition. All safety devices should be inspected carefully at least daily for missing or broken components. Missing, broken, or worn items must be replaced at once to reduce the possibility of injury or death from thrown objects, entanglement, or blade contact.

Replace bent or broken blades with new blades. NEVER ATTEMPT TO STRAIGHTEN, WELD, OR WELD HARDFACING ON BLADES SINCE THIS WILL LIKELY CRACK OR OTHERWISE DAMAGE THE BLADE WITH SUBSEQUENT FAILURE AND POSSIBLE SERIOUS INJURY FROM THROWN BLADES. (SGM-10) New blade bolts must be used when blades are removed.

OPERATION SECTION

The operator's manual and decals affixed on the unit contain important instructions on the safe and proper use of the equipment. Maintain these important safety features on the implement in good condition to ensure the information is available to the operator at all times.

- Ensure the manual canister is secured to the equipment with the operator's manual inside.
- Ensure all decals are in place and legible. Replace missing, damaged, and illegible decals.
- Ensure the cutter hitch is securely attached to the tractor drawbar with a proper size bolt and secured nut.

- Ensure that a properly rated safety tow chain is equipped securing the cutter to the tractor.
- Check that the main driveline is securely attached to the tractor and the clamping cone is seated in the groove of the PTO shaft.
- Ensure the divider drivelines are secure at both ends.

- Ensure chain guards and/or rubber deflectors are in position and not damaged. Replace worn, broken, and missing sections immediately.
- Ensure the driveline integral shields are in good condition and rotate freely.
- Inspect that all bolts and screws are in position and are properly torqued.

- Ensure the tractor PTO master shield is in place, lowered and in good condition.
- Ensure each cutter slip clutch shield is secured in place and in good condition.
- Ensure the driveline slip clutches are properly adjusted and the friction plates are not frozen together. Reference the Maintenance Section for proper slip clutch maintenance.
- Perform scheduled lubrication as specified in the maintenance section.
- Inspect each gearbox oil level and replenish if needed. A low oil level is a warning sign that the gearbox may be cracked or its seal is damaged and needs to be replaced.
- Ensure all gearbox vents are in place and free from clogs.
- Inspect blades and blade bolts for looseness and excessive wear. Make sure the cutter is securely blocked up before crawling beneath. Replace damaged, worn, and missing blades as complete sets to maintain rotary balance.
- Ensure carrier hub nuts are tightened with the cotter pin inserted and spread.
- Inspect the condition of the deck skid shoes and the skid shoe attaching hardware.

Cutting Component Inspection

Inspect blade pan and blade assembly for the following:

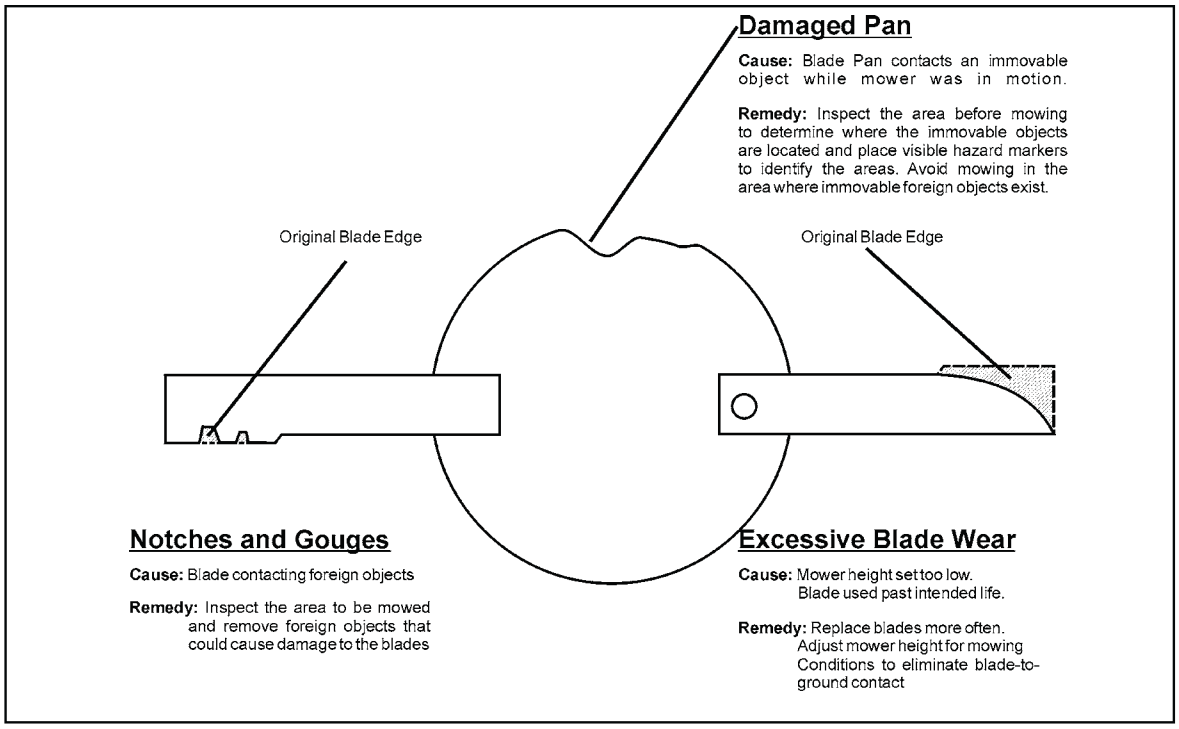

DANGER

Inspect the Blades daily for abnormal wear. REPLACE BOTH BLADES on that carrier IMMEDIATELY if either blade has:

- Become bent or deformed from it's original shape or
- Any cracks are visible, or
- Deep gouges in the blade's surface are present, or
- Gouges or chipped areas in the cutting edge are larger than 1/2", or
- The material on the leading edge has been worn away by more than 1/2"

Failure to replace abnormally worn blades may lead to catastrophic failure of the blades and ejection of the broken part with tremendous force which may cause serious bodily injury or death.

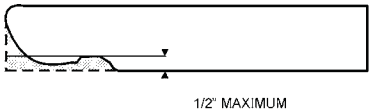

NOTE: Replace Blades in pairs after no more than 1/2" wear

Rotary Cutter PRE-OPERATION Inspection

Cutter ID#_____ Make _____
Date: _____ Shift _____

Before conducting the inspection, make sure the tractor engine is off, all rotation has stopped and the tractor is in park with the parking brake engaged. Make sure the cutter is resting on the ground or securely blocked up and all hydraulic pressure has been relieved.

Item	Condition at Start of Shift	Specific Comments if not O.K.
The Operator's Manual is in the canister on the cutter		
All safety decals are in place and legible		
The tongue/hitch connection bolts & pins are tight		
There are no cracks in tongue or hitch		
The tow chain is secured to the tractor & cutter		
The hydraulic cylinders pins are tight		
There are no leaking or damaged hoses		
The cutter deck is clear of cut grass and debris		
Chain guards/deflectors are in place & in good condition		
Driveline/gearbox shields are in good condition		
Driveline clutches are in good condition; not frozen		
Driveline telescoping members & U-joints are lubricated		
Driveline yokes are securely attached to PTO & cutter		
Gearbox mounting bolts are tight		
Gearbox oil is at the proper level		
Blade carrier retaining nut is tight		
Blades are not chipped, cracked or bent		
Blade bolts are tight		
Wheel lug nuts are tight		
Transport locks are in good condition		

Operator's Signature: _____

DO NOT OPERATE an UNSAFE TRACTOR or Cutter

Rotary Cutter PRE-OPERATION Inspection

Cutter ID#_____ Make _____
Date: _____ Shift _____

Before conducting the inspection, make sure the tractor engine is off, all rotation has stopped and the tractor is in park with the parking brake engaged. Make sure the cutter is resting on the ground or securely blocked up and all hydraulic pressure has been relieved.

Item	Condition at Start of Shift	Specific Comments if not O.K.
The flashing lights function properly		
The SMV Sign is clean and visible		
The tires are in good condition with proper pressure		
The wheel lug bolts are tight		
The tractor brakes are in good condition		
The steering linkage is in good condition		
There are no visible oil leaks		
The hydraulic controls function properly		
The ROPS or ROPS Cab is in good condition		
The seatbelt is in place and in good condition		
The 3-point hitch is in good condition		
The drawbar pins are securely in place		
The PTO master shield is in place		
The engine oil level is full		
The brake fluid level is full		
The power steering fluid level is full		
The fuel level is adequate		
The engine coolant fluid level is full		
The radiator is free of debris		
The air filter is in good condition		

Operator's Signature:_____

DO NOT OPERATE an UNSAFE TRACTOR or Cutter

DRIVING THE TRACTOR AND IMPLEMENT

Safe tractor transport requires the operator possess a thorough knowledge of the model being operated and precautions to take while driving with an attached implement. Ensure the tractor has the capacity to handle the weight of the implement and the tractor operating controls are set for safe transport. To ensure safety while driving the tractor with an attached implement, review the following.

⚠ DANGER

This Implement is wider than the Tractor. Be careful when operating or transporting this equipment to prevent the Implement from running into or striking sign posts, guard rails, concrete abutments or other solid objects. Such an impact could cause the Implement and Tractor to pivot violently resulting in loss of steering control, serious injury, or even death. Never allow the Implement to contact obstacles.

⚠ WARNING

Transport only at speeds where you can maintain control of the equipment. Serious accidents and injuries can result from operating this equipment at high speeds. Understand the Tractor and Implement and how it handles before transporting on streets and highways. Make sure the Tractor steering and brakes are in good condition and operate properly.

Before transporting the Tractor and Implement, determine the proper transport speeds for you and the equipment. Make sure you abide by the following rules:

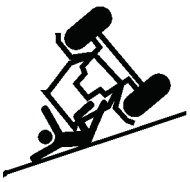

- Test the tractor at a slow speed and increase the speed slowly. Apply the Brakes smoothly to determine the stopping characteristics of the Tractor and Implement. As you increase the speed of the Tractor the stopping distance increases. Determine the maximum transport speed not to exceed 20 mph (30 kph) for towing this equipment.
- Test the equipment at a slow speed in turns. Increase the speed through the turn only after you determine that it is safe to operate at a higher speed. Use extreme care and reduce your speed when turning sharply to prevent the tractor and implement from turning over. Determine the maximum safe turning speed for you and this equipment before operating on roads or uneven ground.
- Only transport the Tractor and Implement at the speeds which allow you to properly control the equipment.

Be aware of the operating conditions. Do not operate the Tractor with weak or faulty brakes or worn tires. When operating down a hill or on wet or rain slick roads, the braking distance increases: use extreme care and reduce your speed. When operating in traffic always use the Tractor's flashing warning lights and reduce your speed. Be aware of traffic around you and watch out for the other guy.

Starting the Tractor

The procedure to start the tractor is model specific. Refer to the tractor operator's manual for starting procedures for your particular tractor. Consult an authorized dealer if the starting procedure is unclear. Ensure the 3-point control lever is in the lowered position and the PTO is disengaged before starting the tractor.

Brake and Differential Lock Setting

Make sure the tractor brakes are in good operating condition. Tractor brakes can be set to operate independently allowing single rear wheel braking action or locked together to provide simultaneous rear wheel braking. FOR MOST DRIVING AND OPERATING CONDITIONS, THE BRAKE PEDALS SHOULD BE LOCKED TOGETHER TO PROVIDE THE MOST EFFECTIVE BRAKING ACTION.

Always disengage the tractor differential lock when turning. When engaged the differential lock will prevent or limit the tractor from turning. During normal cutting conditions, locking the differential provides no benefit and should not be used.

⚠ WARNING

Be aware of the operating conditions. Do not operate the Tractor with weak or faulty brakes. When operating down a hill or on wet or rain slick roads, the braking distance increases; use extreme care and reduce your speed in these conditions. When operating in traffic, always use the Tractor's flashing warning lights and reduce your speed. Be aware of traffic around you and watch out for the other guy.

Operating the Cutter Wings

Wings are positioned with hydraulic cylinders. It is recommended that the tractor be equipped with three hydraulic ports or a 3-spool control valve be used so that each section can be controlled independently. Ensure the hydraulic cylinders and lines are filled with oil by holding the valve control levers in the raised position until the cylinders fully retract (wings) and extend (center). Only operate the cutter with both wings fully lowered, NEVER operate the cutter with a raised wing. Wait until the blades are at a complete stop before raising wings.

Transport Position

To raise cutter wings, drive the unit to a level area and retract the wing hydraulic cylinders. DO NOT raise wings with the cutter positioned on an embankment or other inclined position to prevent overturning the cutter. After the wings are fully raised, install transport lock braces to prevent wings from inadvertently falling. NOTE: If the transport lock braces can not be easily installed, lower the cutter wings and remove rod end of cylinder and adjust the rod clevis in or out to match the transport brace length.

The center of gravity is raised and the cutter more prone to tipping when the wings are in the raised position. When transporting, only raise the center section high enough to clear ground obstacles.

DANGER

When the Wings are folded for transport, the center of gravity is raised and the possibility of overturn is increased. Drive slowly and use extreme caution when turning on hillsides. Overturning the Implement could cause the Implement to overturn the Tractor and vice versa resulting in serious injury or even death. Never fold wings on a hillside... the Implement may overturn.

Operating Position

To lower the wings, remove the transport lock braces and secure braces on storage bracket. DO NOT drive out transport brace pins. The wing cylinder may need to be retracted to remove tension for brace removal. After removing brace bars, extend wing hydraulic cylinders and fully lower wings.

The valves operating wing cylinders should be placed in the float position while mowing to allow the cutter to follow the contour of uneven terrain and to prevent the wings from creeping up. When extending a wing over a ditch for mowing, place the control valve lever detents in the center position. This will give the cutter more stability and prevent the opposite wing from raising. DO NOT operate the cutter with the valves in the detent position for extended periods of time to prevent deck frame damage.

WARNING

Use extreme care when lowering or unfolding the implement's wings. Make sure no bystanders are close by or underneath the wings. Allow ample clearance around the implement when folding or unfolding the wings. Use extreme caution around buildings or overhead power lines.

Driving the Tractor and Cutter

Start off driving at a slow speed and gradually increase your speed while maintaining complete control of the tractor and cutter. Moving slowly at first will also prevent the tractor from rearing up and loss of steering control. The tractor should never be operated at speeds that cannot be safely handled or which will prevent the operator from stopping quickly during an emergency. If the power steering or engine ceases operating, stop the tractor immediately as the tractor will be difficult to control.

Drive the tractor with the 3-Point lift arms in the raised position and lock the control lever in the transport detent position to prevent damage to the cutter driveline and tongue when turning.

Perform turns with the tractor and cutter at slow speeds to determine how the tractor with an attached cutter handles a turn. Determine the safe speed to maintain proper control of the tractor when making turns. When turning with a towed implement, the overall working length of the unit is increased. Allow additional clearance for the cutter when turning.

To avoid overturns, drive the tractor with care and at safe speeds, especially when operating over rough ground, crossing ditches or slopes, and turning corners. Tractor wheel tread spacing should be increased when working on inclines or rough ground to reduce the possibility of tipping. Use extreme caution when operating on steep slopes. Keep the tractor in a low gear when going downhill. DO NOT coast or free-wheel downhill.

Crossing Ditches and Steep Inclines

When crossing ditches with steep banks or going up sharp inclines, it is possible that the main driveline inner profile will penetrate into the outer housing to its maximum depth until the assembly becomes solid (driveline is at its extreme shortest length). This type of abusive operation can cause serious damage to the tractor and cutter drive by pushing the PTO into the tractor and through the support bearings or downward onto the PTO shaft, breaking it off.

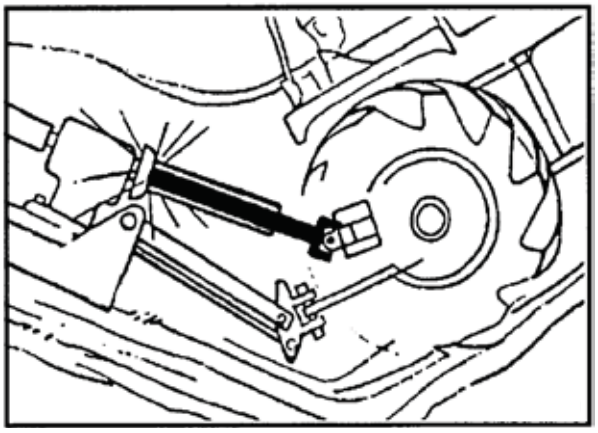

Damage resulting from over collapse of the driveline's inner profile and its outer housing may allow the driveline to come loose from the Tractor which could cause bodily injury to the operator or bystanders and/or extensive damage to the Tractor or Implement.
When confronted with an incline or ditch, do not approach from an angle which is perpendicular or straight on as damaged to over collapse of the driveline may occur.

When crossing such terrain, the wings should be fully lowered for a lower center of gravity and added stability.

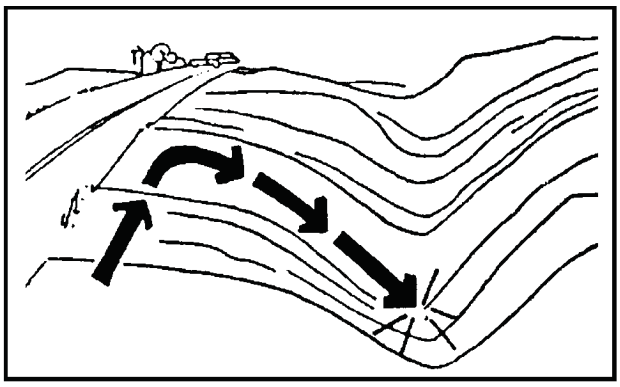

INCORRECT: DO NOT approach ditch straight on.

Inclines and ditches should be approached along a line which is at an angle as shown. This type of path will reduce the possibility of over-collapse of the driveline and resulting damage. If the gradient is so steep that such an approach increases the possibility of a tractor roll-over, select an alternate crossing path.

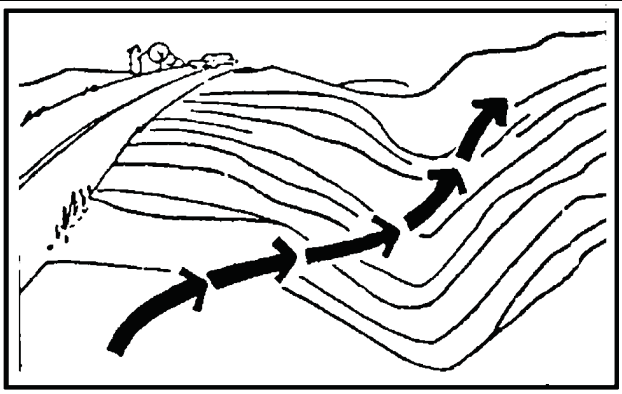

CORRECT: Approach ditch at an angle

When operating the tractor and cutter across slopes and inclines, through ditches, and other uneven terrain conditions, it is important to maintain sufficient deck to ground clearance. Blade contact with the ground may cause soil, rocks and other debris to be thrown out from under the cutter resulting in possible injury and/or property damage. Ground contact also produces a severe shock load on the cutter drive and to the cutter blades resulting in possible damage and premature wear.

OPERATING THE TRACTOR AND IMPLEMENT

THE OPERATOR MUST COMPLETELY UNDERSTAND HOW TO OPERATE THE TRACTOR AND IMPLEMENT AND ALL CONTROLS BEFORE ATTEMPTING TO OPERATE. The operator must read and understand the Safety and Operation Sections of the implement and tractor operator's manuals. These manuals must be read and explained to any operator who cannot read. Never allow someone to operate the implement and tractor without complete operating instructions.

Before starting any operation, the operator must become familiar with the area to be worked in and any obstacles and hazards contained within to ensure safety to the operator, bystanders, and equipment. Special attention should be paid to foreign debris, rough terrain, steep slopes, and passersby and animals in the area.

⚠ WARNING

Extreme care should be taken when operating near loose objects such as gravel, rocks, wire, and other debris. Inspect the area before mowing. Foreign objects should be removed from the site to prevent machine damage and/or bodily injury or even death. Any objects that cannot be removed must be clearly marked and carefully avoided by the operator. Stop mowing immediately if blades strike a foreign object. Repair all damage and make certain rotor or blade carrier is balanced before resuming mowing.

Many varied objects, such as wire, cable, rope, or chains, can become entangled in the operating parts of the cutter head. These items could then swing outside the housing at greater velocities than the blades. Such a situation is extremely hazardous and could result in serious injury or even death. Inspect the cutting area for such objects before mowing. Remove any like object from the site. Never allow the cutting blades to contact such items.

Foreign Debris Hazards

Before mowing, inspect the area to make sure there are no foreign objects that the cutter blades could hit or become entangled with. Remove all foreign objects and debris. If objects are too big to remove, mark them clearly and be sure to prevent the cutter blades from contacting them.

If you hit a solid object or foreign debris, stop the cutter and tractor at once. Immediately idle the engine speed and disengage the PTO. Wait for all cutter rotating motion to stop, then raise the cutter and move the tractor and implement off the object. Inspect the area and remove, or mark the location of the debris. Inspect the condition of the cutter and make any needed repairs immediately. Make sure the blades are not damaged and the carrier is balanced before resuming operation.

Always wear your seat belt securely fastened and only operate the tractor and cutter with the ROPS in the raised position. If the tractor or cutter hits a tree stump, rock, or bump, a sudden movement could throw you off of the seat and under the tractor and/or cutter. The seat belt is your best protection from falling off the tractor and the ROPS provides protection from being crushed during a tractor roll-over.

Bystanders/Passersby Precautions

If a bystander comes within 300 feet of the tractor while the cutter is being operated, stop the tractor at once, idle the engine and disengage the PTO. Do not engage the PTO again until all bystanders are well past the 300 foot distance.

Rotary Cutters are capable under adverse conditions of throwing objects for great distances (300 feet or more) and causing serious injury or death. Follow safety messages carefully.

STOP MOWING IF PASSERSBY ARE WITHIN 100 YARDS UNLESS:

-Front and Rear Deflectors, Chain Guards, or Bands are installed and in good, workable condition;

-Cutter sections or Wings are running close to and parallel to the ground without exposed Blades;

-Passersby are outside the existing thrown-object zone;

-All areas have been thoroughly inspected and all foreign material such as rocks, cans, glass, and general debris has been removed.

NOTE: Where there are grass and weeds high enough to hide debris that could be struck by the blades, the area should be: inspected and large debris removed, mowed at an intermediate height, inspected, closely with any remaining debris being removed, and mowed again at desired final height. (This will also reduce power required to mow, reduce wear and tear on the Cutter drivetrain, spread cut material better, eliminate streaking, and make the final cut more uniform).

Engaging the Power Take Off (PTO)

Before engaging the PTO, make certain that the area is clear of bystanders and passersby. The implement must be completely lowered and the deck positioned at a safe operating height. NEVER engage the PTO with the implement in the raised position.

Set the tractor engine speed at approximately 1,000 RPM before engaging the PTO. Shift the PTO control to the on position, and slowly increase the engine speed until the PTO is operating at the rated speed. If you hear unusual noises or see or feel abnormal vibrations, disengage the PTO immediately. Inspect the implement to determine the cause of the noise or vibration and repair the abnormality.

⚠ WARNING

Do not let the Blades turn when the Cutter Deck is raised for any reason, including clearance or for turning. Raising the Cutter deck exposes the Cutting Blades which creates a potentially serious hazard and could cause serious injury or even death from objects thrown from the Blades.

⚠ WARNING

Do not put hands or feet under cutter decks. Blade Contact can result in serious injury or even death. Stay away until all motion has stopped and the decks are securely blocked up.

PTO RPM and Ground Speed

Ground speed for mowing will depend upon the height, type, and density of vegetation to be cut. Recommended speed for efficient cutter performance is between 2 and 5 mph. Operate the cutter at its full rated PTO speed to maintain blade speed for a clean cut. Refer to the tractor operator's manual or the tractor instrument panel for the engine speed and gear to provide the required PTO and desired ground speed. Make sure that the cutter is operating at its full rated speed before entering the vegetation to be cut. If it becomes necessary to temporarily regulate engine speed, increase or decrease the throttle gradually.

Ground speed is achieved by transmission gear selection and not by the engine operating speed. The operator may be required to experiment with several gear range combinations to determine the best gear and range which provides the most ideal performance from the cutter and most efficient tractor operation. As the severity of cutting conditions increase, the ground speed should be decreased by selecting a lower gear to maintain the proper operating PTO speed.

⚠ WARNING

Do not exceed the rated PTO speed for the Implement. Excessive PTO speeds can cause implement driveline or blade failures resulting in serious injury or death.

⚠ WARNING

Mow at the speed that you can safely operate and control the tractor and cutter. Safe mowing speed depends on terrain condition and grass type, density, and height of cut. Normal ground speed range is from 2 to 5 mph. Use slow mowing speeds when operating on or near steep slopes, ditches, drop-offs, overhead obstructions, power lines, or when debris and foreign objects are to be avoided.

Operating the Cutter

Only operate the cutter from the tractor operator's seat with the seatbelt securely fastened. The tractor must be equipped with a ROPS in the raised position or a ROPS cab.

The cutter is designed to cut vegetation up to 3 1/2" in diameter. Sharp blades will produce a cleaner cut and require less power. Travel at a speed that allows the cutter sufficient time to cut through the vegetation and maintain the PTO operating speed to prevent overloading the cutter and tractor. Choose a driving pattern that provides the maximum pass length and minimizes turning.

Under certain conditions, tractor tires may roll some grasses down preventing them from being cut at the same height as the surrounding area. When this occurs, reduce the tractor ground speed while maintaining the operating speed of the cutter. A slower ground speed will permit grasses to at least partially rebound and be cut. Taking a partial cut and/or reversing the direction of travel may also help produce a cleaner cut.

Avoid mowing in the reverse direction when possible. In situations where the cutter must be backed to access areas to be cut, make sure there are no persons or other foreign debris behind the cutter before mowing in reverse. When mowing in reverse, operate the tractor and cutter at a reduced ground speed to ensure tractor and cutter control is maintained.

WARNING

Do not mow with two machines in the same area except with Cab tractors with the windows closed.

WARNING

Mow only in conditions where you have clear visibility in daylight or with adequate artificial lighting. Never mow in darkness or foggy conditions where you cannot clearly see at least 100 yards in front and to the sides of the tractor and cutter. Make sure that you can clearly see and identify passersby, steep slopes, ditches, drop-offs, overhead obstructions, power lines, debris and foreign objects. If you are unable to clearly see these type of items discontinue mowing.

WARNING

Avoid mowing in reverse direction when possible. Check to make sure there are no persons behind the cutter and use extreme care when mowing in reverse. Mow only at a slow ground speed where you can safely operate and control the tractor and cutter. Never mow an area that you have not inspected and removed debris or foreign material.

WARNING

Follow these guidelines to reduce the risk of equipment and grass fires while operating, servicing, and repairing the Cutter and Tractor:

-Equip the Tractor with a fire extinguisher in an accessible location.

-Do Not operate the Cutter on a Tractor with an underframe exhaust.

-Do Not smoke or have an open flame near the Cutter and Tractor.

-Do Not drive into burning debris or freshly burnt areas.

-Ensure slip clutches are properly adjusted to prevent excessive slippage and plate heating.

-Never allow clippings or debris to collect near drivelines, slip clutches, and gearboxes. Periodically shut down the Tractor and Cutter and clean clippings and collected debris from the cutter deck.

When you get to the end of a pass, slightly raise the cutter (2-4") before turning. Never raise the cutter entirely while the blades are turning. If the cutter must be raised higher than 12" from ground level, disengage the tractor PTO and wait for all cutter rotation to come to a complete stop before proceeding to raise the cutter. NEVER raise the cutter wings while the blades are turning.

When turning, the angle between the tractor and cutter should not be so great that a clattering of the U-joints occurs. Sharp turns can cause premature failure of the joints and place pressure on the tractor PTO shaft and could cause extensive mechanical damage to the cutter and tractor.

If the cutter is operated in conditions that require frequent sharp turning, the cutter should be equipped with a Constant Velocity driveline. CV joints enable the tractor PTO shaft and cutter driveline to be angled safely up to 80 degrees with no damage to the cutter or driveline.

⚠ WARNING

Do not let the Blades turn when the Cutter Deck is raised for any reason, including clearance or for turning. Raising the Cutter deck exposes the Cutting Blades which creates a potentially serious hazard and could cause serious injury or even death from objects thrown from the Blades.

Stay alert and watch for trees, low hanging limbs, power lines, and other overhead obstacles and solid ground objects while you are operating. Use care to avoid hitting these items.

When mowing across uneven areas such as road shoulders, ditch edges, and other uneven terrain, position cutter so that one support wheel is near the highest point to prevent blades from cutting into gravel or dirt which can cause rapid blade wear and extremely severe shock loads on the drivetrain resulting in rapid wear or damage to these components. Blades contacting the ground may cause objects to be thrown out from under the cutter deck. Always avoid operating the cutter at a height or position which may cause the blades to contact the ground. Cutting into the berm or edge of the ditch will cause abnormal and accelerated blade wear and possible blade component failure.

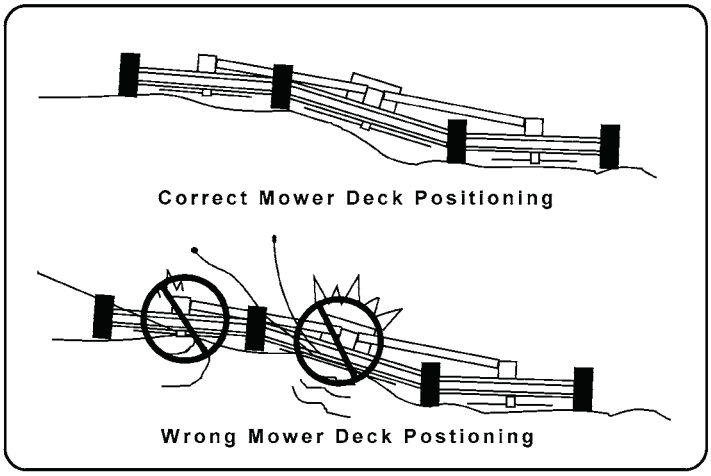

Shutting Down the Implement

To shut down the implement, first bring the tractor to a complete stop. Then slow down the implement by reducing the engine speed before disengaging the PTO. Wait for all motion to stop before proceeding to drive or shut down the tractor.

Park the tractor on a level surface, place the transmission in park or neutral and apply the parking brake, lower the attached implement to the ground, shut down the engine, remove the key, and wait for all motion to come to a complete stop before exiting the tractor.

DISCONNECTING THE Cutter FROM THE TRACTOR

Before disconnecting the cutter, the PTO must be disengaged and blade rotation at a complete stop. Move the cutter to a level storage location and lower the center section and both wings to the ground. If the cutter will be stored with the wings in the raised position, install both wing transport lock braces. If the cutter is not resting securely on the ground, block the cutter up securely before attempting to disconnect it from the tractor.

Use extreme care to keep feet and hands from under the cutter and clear of any pinch points.

DANGER

Always shut the Tractor completely down, place the transmission in park, and set the parking brake before you or anyone else attempts to connect or disconnect the Implement and Tractor hitches.

DANGER

Never unhitch without using the Tongue Jack. The Tongue is very heavy. Attempting to lift the Tongue without using the Tongue Jack could cause strains or other injury. Allowing the tongue to fall suddenly and unexpectedly could result in crushing injury. Use the Tongue Jack for lifting the Implement only. Overloading the Tongue Jack can cause failure with possible serious bodily injury or even death.

When disconnecting the cutter the tractor should be completely shut down and secured in position. Relieve hydraulic pressure by moving the control levers back and forth several times. Lower the parking jack and raise the cutter until the tongue clevis is no longer resting on the tractor drawbar and is supported solely by the jack. The jack should be in a near vertical position with the ground and can be adjusted by loosening the positioning nut and moving the jack up to 15 degrees in each direction. Also make sure that the jack foot is securely resting at ground level or securely supported by a block before raising the cutter. Once the cutter tongue is being supported entirely by the jack, remove the hitch bolt, locknut, and washers. Remove the hydraulic hoses from the tractor and secure to the cutter to prevent contact with dirt.

After disconnecting the cutter hitch, remove the cutter driveline from the tractor PTO shaft. Place the driveline in its storage bracket to prevent it from contacting mud or dirt which can contaminate the universal joint bearings and shorten the life of the driveline.

After the driveline has been removed from the tractor, place the PTO master shield back in the operating position.

CUTTER STORAGE

It is recommended that the cutter be stored with the center section and both wings fully lowered to ground level. If the cutter is stored with the wings in the raised position, select a level area and install wing transport braces to prevent the wings from falling BEFORE disconnecting the cutter hitch from the tractor.

Properly preparing and storing the cutter at the end of the season is critical to maintaining its appearance and to help ensure years of dependable service. The following are suggested storage procedures:

- Thoroughly clean all debris off the cutter to prevent damage from rotting grass and standing water.
- Lubricate all cutter grease points and fill gearbox oil levels as detailed in the maintenance section.
- Tighten all bolts and pins to the recommended torque.
- Check the cutter for worn and damaged parts. Perform repairs and make replacements immediately so that the cutter will be ready for use at the start of the next season.
- Store the cutter in a clean, dry place with the cutter housing resting securely on blocks or at ground level.
- Keep the driveline yoke from sitting in water, dirt and other contaminants.
- Apply touch-up where necessary to prevent rust and maintain the appearance of the cutter.

It is critical that driveline clutches slip when an obstacle or heavy load is encountered to avoid cutter and/or tractor damage. If the cutter sits outside for an extended period of time or is exposed to rain and/or humid air, the clutch lining plates must be inspected to ensure they are not frozen together from rust or corrosion. If the cutter has been exposed to such conditions, at the start of each mowing season, and any time it is suspected that the slip clutch plates may be frozen together, readjust the slip clutch as detailed in Seasonal Clutch Maintenance of the maintenance section in this manual.

DANGER

Never allow children to play on or around Tractor or Implement. Children can slip or fall off the Equipment and be injured or killed. Children can cause the Implement to shift or fall crushing themselves or others.

TRANSPORTING THE TRACTOR AND IMPLEMENT

Inherent dangers of operating the tractor and implement and the possibility of accidents are not left behind when you finish working in an area. Therefore, the operator must employ good judgement and safe operation practices when transporting the tractor and implement between locations. By using good judgement and following safe transport procedures, the possibility of accidents while moving between locations can be substantially minimized.

DANGER

Never allow children or other persons to ride on the Tractor or Implement. Falling off can result in serious injury or death.

Before transporting the tractor and cutter, idle the tractor engine, disengage the PTO and wait for all cutter moving parts to come to a complete stop. Raise the cutter wings and secure in position with transport lock braces. When transporting, only raise the center deck enough to clear ground obstacles to prevent tipping, especially when traveling through rough terrain.

If the tractor's hydraulic pump is not independent of the tractor PTO, or if the tractor PTO has to be run to have hydraulic power, disconnect the cutter driveline from the tractor PTO output shaft. Secure the driveline to the cutter deck to prevent driveline damage or loss during transport.

Before transporting the tractor on a public roadway or boarding a trailer for transport, the tractor brake pedals should be locked together. Locking the pedals ensures that both wheels brake simultaneously while stopping, especially when making an emergency stop.

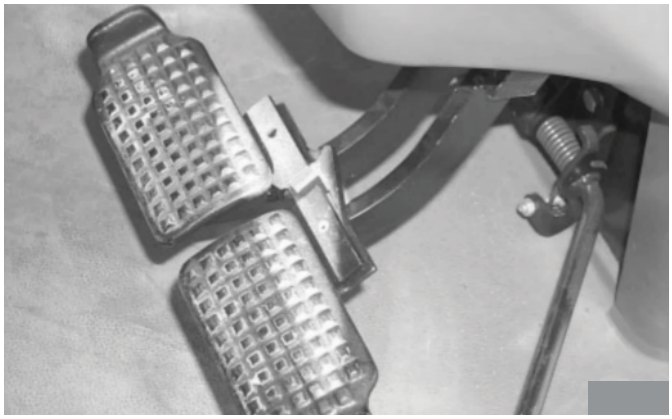

Use extreme caution and avoid hard applications of the tractor brakes when towing heavy loads at road speeds. Never tow the implement at speeds greater than 20 MPH.

Tire and Wheels

Laminated Sectional Tires are designed for conditions where puncture proof performance is required and the cutter will not be transported for long distances on roadways. Transport speed for laminated tires should not exceed 10 MPH. Excessive speed can cause damage to the machine and tire sections. Sectional tires must be installed such that the rubber segments lay with the ground.

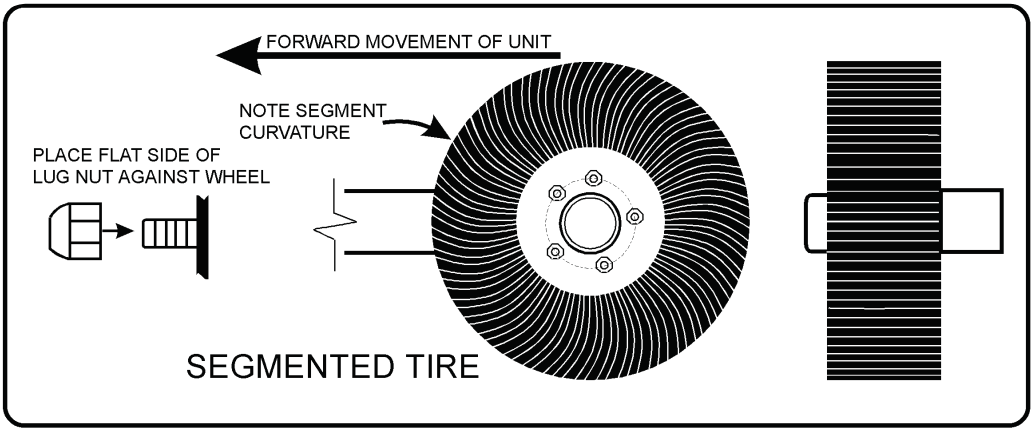

Foam Filled used Airplane Tires are ideal for conditions where a puncture proof tire is needed and the cutter is frequently transported between locations.

Pneumatic Implement Tires are ideal for frequent long distance towing, however, they are not puncture proof and are not recommended for mowing brushy areas or other conditions that could damage the tires. Check side wall of tire for proper inflation pressure. DO NOT over-inflate.

(In some cases, lug nut taper is reversed when tire rim requires such a change-verify with local dealer)

Transporting on Public Roadways

Extreme caution should be used when transporting the tractor and cutter on public roadways. The tractor must be equipped with all required safety warning features including a SMV emblem and flashing warning lights to alert drivers of the tractor's presence. Remember that roadways are primarily designed for automotive drivers and most drivers will not be looking out for you, therefore, you must look out for them. Check your side view mirrors frequently and remember that vehicles will approach quickly because of the tractor's slower speed. Be extremely cautious when the piece of equipment that you are towing is wider than the tractor tire width and/or extends beyond your lane of the road.

Make sure that a proper size safety tow chain is secured between the tractor and cutter before entering a public road. Secure the center section at a safe transport height by placing additional stroke control spacers on the center axle cylinder and then lower the cutter. Secure the cutter wings in the raised position with the transport lock braces.

⚠ WARNING

Only tow the Implement behind a properly sized and equipped Tractor which exceeds the weight of the Implement by at least 20%. DO NOT tow the Implement behind a truck or other type of vehicle. Never tow the Implement and another Implement connected in tandem. Never tow the Implement at speeds over 20 MPH.

⚠ DANGER

Never allow children or other persons to ride on the Tractor or Implement. Falling off can result in serious injury or death.

⚠ WARNING

Make certain that the "Slow Moving Vehicle" (SMV) sign is installed in such a way as to be clearly visible and legible. When transporting the Equipment use the Tractor flashing warning lights and follow all local traffic regulations.

The SMV (Slow-Moving Vehicle) emblem is universal symbol used to alert drivers of the presence of equipment traveling on roadways at a slow speed. SMV signs are a triangular bright orange with reflective red trim for both easy day and night visibility. Make sure the SMV sign is clean and visible from the rear of the unit before transporting the tractor and implement on a public roadway. Replace the SMV emblem if faded, damaged, or no longer reflective.

Make sure that all tractor flashing warning lights, headlights, and brake/tail lights are functioning properly before proceeding onto public roads. While newer model tractors have plenty of lighting to provide warning signals and operating lighting, most older models are only equipped with operating lights. Consult an authorized tractor dealer for lighting kits and modifications available to upgrade the lighting on older tractor models.

When operating on public roads, have consideration for other road users. Pull to the side of the road occasionally to allow all following traffic to pass. Do not exceed the legal speed limit set in your country for agricultural tractors. Always stay alert when transporting the tractor and implement on public roads. Use caution and reduce speed if other vehicles or pedestrians are in the area.

Reduce speed before turning or applying the brakes. Ensure that both brake pedals are locked together when operating on public roads.

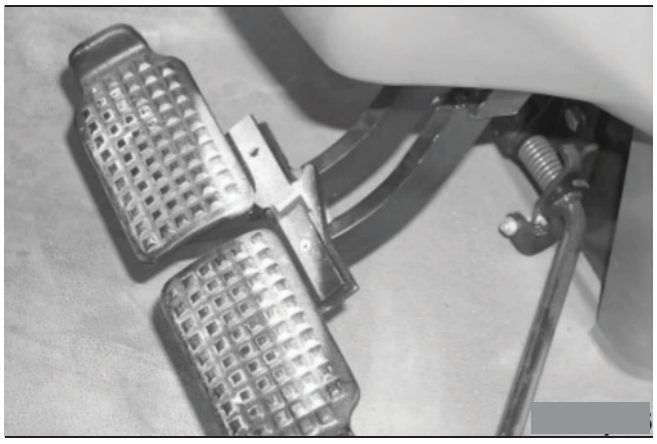

Hauling the Tractor and Implement

Before transporting a loaded tractor and implement, measure the height and width dimensions and gross weight of the complete loaded unit. Ensure that the load will be in compliance with the legal limits set for the areas that will be traveled through.

Use adequately sized and rated trailers and equipment to transport the tractor and implement. Consult an authorized dealer to determine the proper equipment required. Using adequately sized chains, heavy duty straps, cables and/or binders, securely tie down both the front and rear of the tractor utilizing the proper tie down locations as specified by the tractor manufacturer.

Arrange the chains so that when tightened, the chains are pulling downward and against themselves.

Carefully tighten the securing chains or other fasteners using boomers or binders to apply maximum tension. Use extreme care when attaching and removing the securing devices as the extreme tension involved when released has the potential to inflict serious injury.

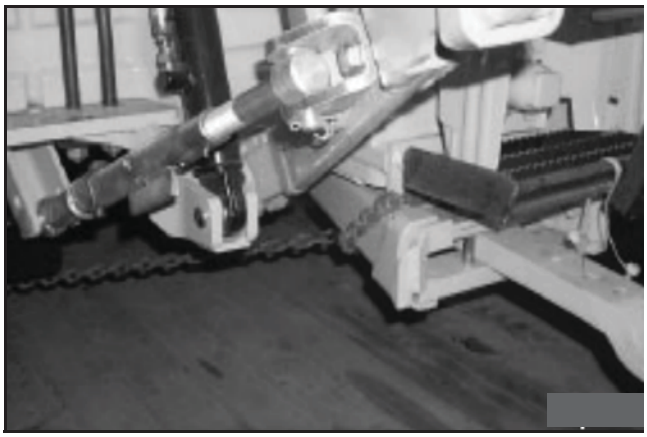

While hauling the tractor and implement, make occasional stops to check that the tractor and implement have not moved or shifted and that the securing chains have maintained tension. If during transport a hard braking, sharp turning, or swerving action was performed, stop at the next safe location to inspect the security of the load.

TROUBLE SHOOTING GUIDE

Problem	Possible	Cause Remedy
Excessive Vibrations	Check Gear box bolts.	Tighten if loose.
	Check For loose nuts on bladeholder and blades	Tighten If loose
	Check for bent output shaft. If shaft is bent oil will normally leak from the bottom seal.	Replace shaft if bent.
	Check to see if blades are free swinging.	Free blades so they swing
	Check for even wear on each blade tip. Were both blades changed at the same time?	Weigh blades. Weight should be within 1 oz. Always replace both blades
	Blade Broken.	Replace blades, in sets.
	Blade carrier bent.	Replace carrier.
	Blade hub not properly seated on shaft	Remove hub, check tapered spline shaft, clean and replace.
	New Blade or bolts matched with worn blade or bolts.	Replace blades or bolts in sets
	Drivelines not phased correctly. Implement & tractor yokes must be in line.	Replace Drivelines.
Gearbox Overheating	Low on lubricant.	Fill to level plug.
	Improper type lubricant.	Consult Dealer about lubricant.
	Excessive trash build-up around gear box	Remove trash.
	Bearing or gears set up improperly	Consult your dealer.
Gearbox Noisy	Rough gears.	Run in or change gears.
	Worn bearing.	Replace bearing
Gearbox Leaking	Damaged oil seal	Replace Seal.
	Bent shaft.	Replace oil seal and shaft.
	Shaft rough in oil seal area.	Replace or repair shaft.
	Oil seal installed wrong.	Replace seal.
	Oil seal not sealing in the housing.	Replace seal or use a sealant on OD of seal.
	Oil level too high.	Drain oil to proper level.
	Sand hole in casting.	Replace castings or gear box.
	Gasket damaged.	Replace gasket.
	Bolts loose.	Tighten bolts.

Problem	Possible Cause	Remedy
Clutch Slips Excessively	Clutch linings badly worn or plates warped. Too much power for clutch. Oil on facings. Friction facings glazed.	Repair clutch per maintenance section of manuals. Reduce ground speed and material intake. Replace facings. Clean with emery cloth.
Blade Wears Too Fast	Cutting in sandy conditions. Cutting in rocky conditions. Soft "will fit" blades.	Increase cutting height. Increase cutting height.
Hydraulic Cylinder Will Not Op.	Not enough pressure. Valve not connected properly. Quick coupler not completely connected.	Check pressure. Re-plumb valve. Complete connection.
Oil Squirting from Breather vent hole	Oil leaking by piston ring. (A small amount of leakage is normal) Piston "O" ring worn Cylinder wall scored or pitted. Wrong piston ring on piston.	Do not carry cutter on cylinder. (Use stroke collars) Replace piston "O" ring. Replace cylinder. Use correct piston rings.
Not Cutting Clean	Blades dull. Blade rotation incorrect. Carrier RPM too low. Cutter not level. Tires mashing down grass. Ground speed too fast. Blades locked back. Blades riding up due to blade bolt wear.	Sharpen or replace blades. Use correct blade for carrier rotation Use correct PTO speed and check for correct gear box ratio. Adjust machine. Move tires out of cutter overlap area. Minimum 60" inside tires. Reduce ground speed. Free blades. Replace blade bolts.
Streaking Conditions In Swath	Conditions too wet for cutting. Blades unable to cut that part of grass pressed down by path of tractor tires. rpm. Dull Blades. Height of cutter lower at rear or front.	Allow grass to dry before cutting. Slow ground speed of tractor but keep engine running at full PTO Move rear tires as wide as possible so wing blades will pick up grass. Sharpen or replace blades. See Cutting Height Instructions.

MAINTENANCE

Before operating your rotary cutter, make sure it is properly lubricated and thoroughly inspected. Only minimum of time and effort is required to regularly lubricate and maintain this machine to provide long life and trouble free operation.

Always disengage the PTO before raising the rotary cutter for transporting or making adjustments.

Lubrication information:

Do not let excess grease collect on or around parts, particularly when mowring in sandy areas. The accompanying illustration shows lubrication points. The chart gives the frequency of lubrication in hours, based on normal operating conditions. Severe or unusual conditions may require more frequent lubrication. FIGURE 1.

Use an SAE multi-purpose, lithium-type grease for all locations shown. Be sure to clean the fitting thoroughly before using grease gun. Daily lubrication of the wing driveline slip joint is necessary. Failure to maintain proper lubrication will result in damage to U-joint, gearbox, and/or driveshaft.

Recommended lubricant is Exxon - Spartan EP220, Mobil HD 80W90, or equal. Required lubricant is a SAE 90 or SAE 80W90 with EP additives for extreme pressure and temperature, with an API-G1-5 Service rating.

Drivelines

The drivelines and U-Joints should be inspected each morning before the cutter is started. FIGURE 5 & 6

The U-Joint and CV Joint on the driveline undergo extreme forces when the unit is turning or when the wings are being raised. It is important that the U-Joints and CV Joints be greased each day before the unit is started. The U-Joint and CV Joint assemblies are located at each end of the Center and wing drivelines. The CV joint is located at the end of the main driveline. The U-Joint and the CV joint are accessible by rotating the driveline safety shield until the hole in the shield matches up with the grease fitting. Use #2 bearing grease for lubrication. Inspect the U-Joint. If there is noticeable movement in the driveline, replace the U-Joint before it causes severe damage to the driveline.

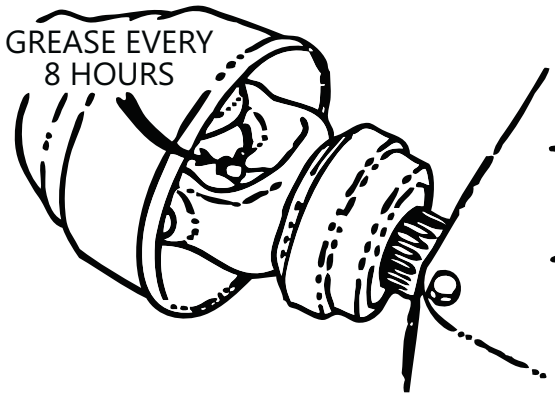

FIGURE 5

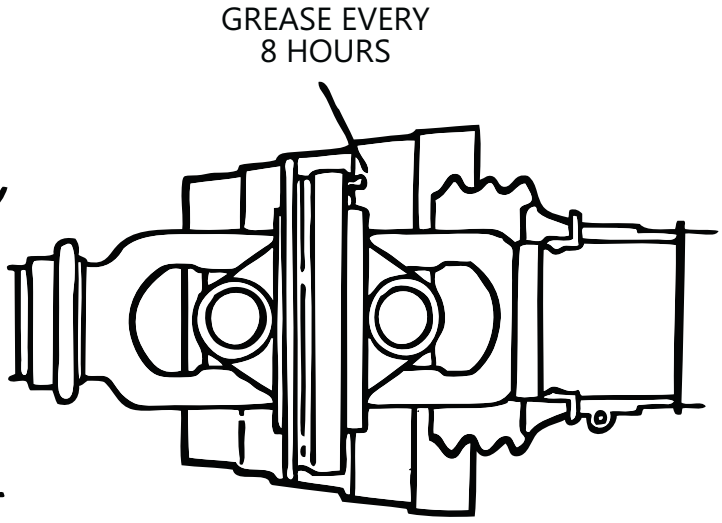

FIGURE 6

PTO SHAFT MAINTENANCE

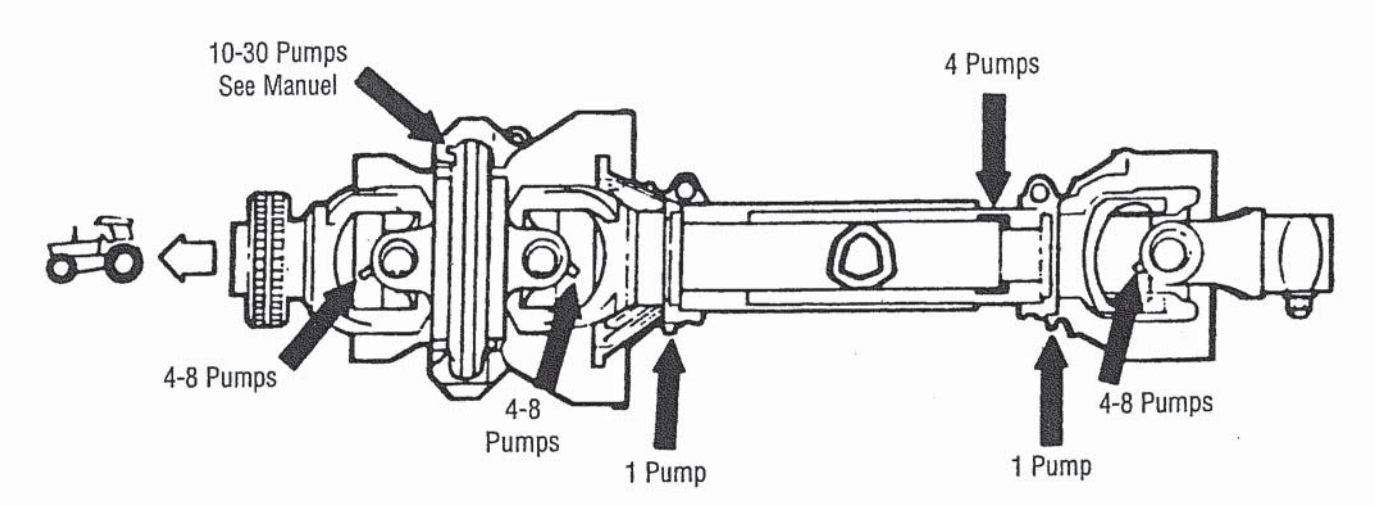

All points should be lubricated every 8 hours of use

- For maximum life and performance, the CV body MUST be greased regularly. Lubrication with the driveline is a straight position - up to 30 pumps of grease may be required.
- The metal drive tubes MUST be greased to operate properly.
- Shielding is subject to damage from abuse and weathering. Replace ALL damaged components and ALL shielding removed during maintenance
- DO NOT use PTO adapter with CV drivelines. Replace special Taper Pin bolts only with genuine OEM parts, periodically check tightness of nuts.
- Consult Operator's Manual for additional information

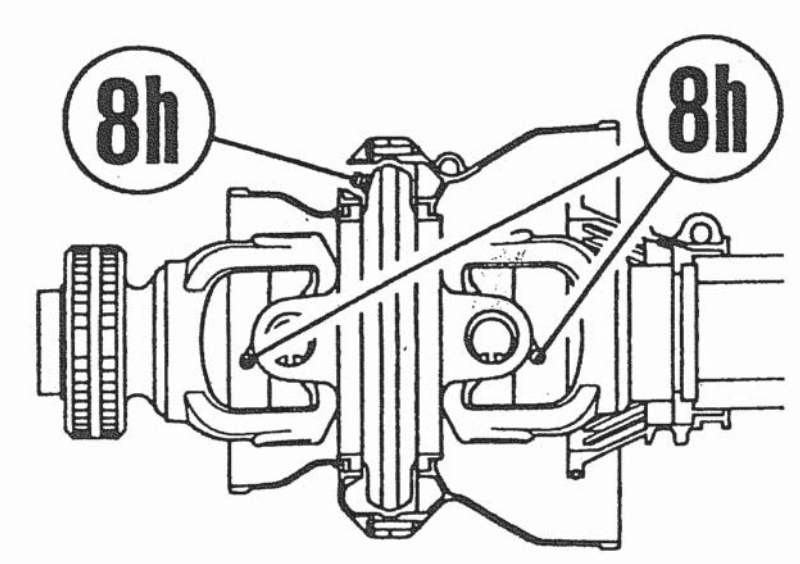

The CV joint must be greased every 8 hours (shield bearings, cross journal, and internal parts) as indicated in the grease diagrams.
To disassemble, remove the hardshell shield by removing the screws, then remove the cross journal in the same manner used for ordinary universal joint.
Careful attention must be paid to the geometry of the cross journal when replacing. The body is asymmetrical concave part must face towards the body with the grease nipple to the outside.

A slip clutch is incorporated in the PTO driveline. It is designed to slip, absorb the shock load, and protect the driveline. Clutch torque setting is NOT factory set. If clutch slips excessively, check friction discs for excessive wear. To adjust clutch, first check length of springs assembled on clutch. Length should be 1 1/8 (28.5 mm). If not, adjust length of bolt to obtain proper spring length. If additional adjustment is required, tighten each bolt 1/2 turn. NOTE: DO NOT tighten spring bolts over 1/2 turn at any adjustment. Excessive tightening can cause clutch to become frozen and not slip which could cause damage to the tractor PTO, drivelines, or gearbox.

Avoid over heating of clutches caused by too long frequent slipping of the clutch since this can damage the friction plates and clutch parts. WHen checking slip clutch for overheating, do not touch with hand. Clutch could be extremely hot and cause severe burn.

SEASONAL CLUTCH MAINTENANCE

It is important that the clutches slip when an obstacle or load heavier than the clutch setting is encountered. Before using the cutter each season, use the following procedure to make sure the clutch will slip and give the overload protection required.

1. Loosen spring nut until the sprig is free, and then retighten approximately one turn.

2. Attach machine to tractor, set engine at approximately half throttle and quickly engage PTO. The procedure will break clutch facings loose and allow the proper torque to be maintained.

3. Return the nuts and bolts to their original position of 1 1/8" compressed spring length for 540 RPM or 1 3/16" for 1000 RPM tractor

Note: if machine sits outside longer than 30 days and is exposed to rain and humid air, the clutches should be removed from machine and store in dry area. Clutch facing will soak up moisture and cause the metal plates to rust badly. When this occur, the break-away torque increases greatly and damage to gearbox, driveline, or tractor PTO can occur.

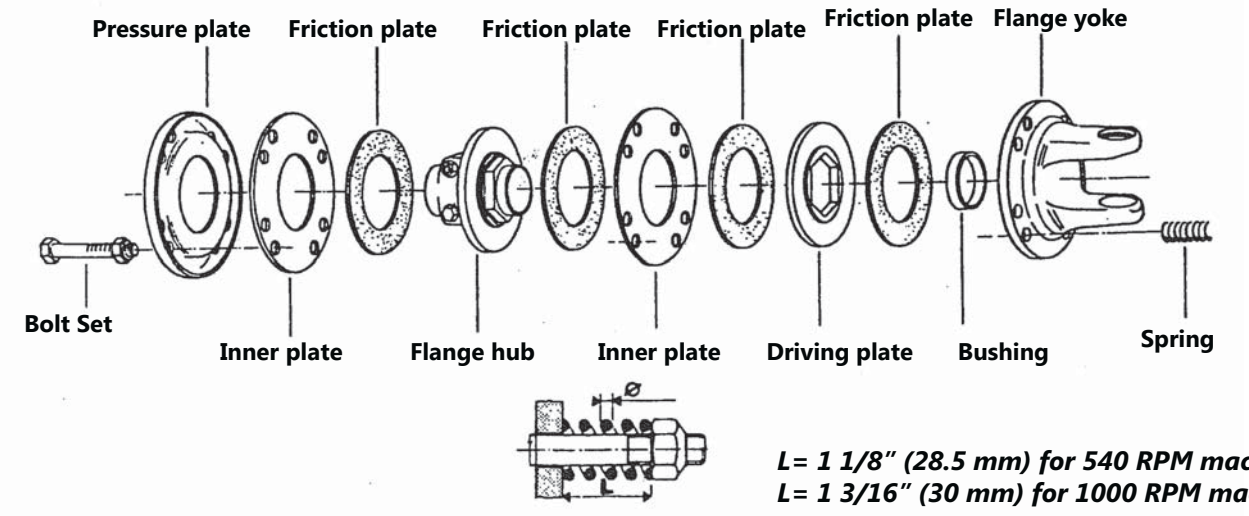

GEARBOX MAINTENANCE

Check Gearbox Oil

Divider Gearbox

Important: When checking the oil level or filling the gearboxes, the cutter must be level.

Note: It may be necessary to jack one end of the cutter up to level out the gearboxes.

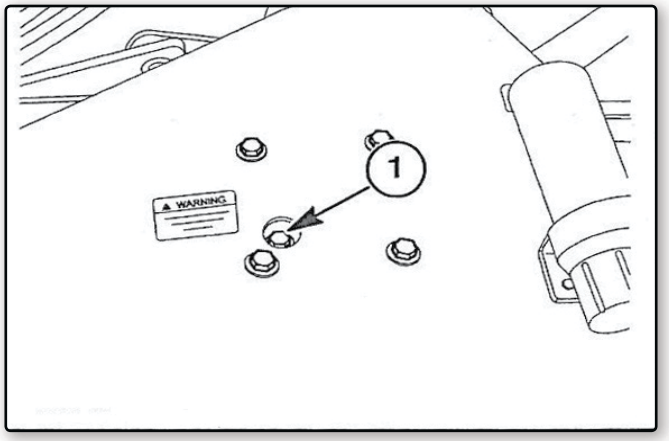

Check the oil in the gearboxes every 50 hours. To check the oil level in the divider gearbox remove the oil fill plug/dip stick, 1, from the gearbox.

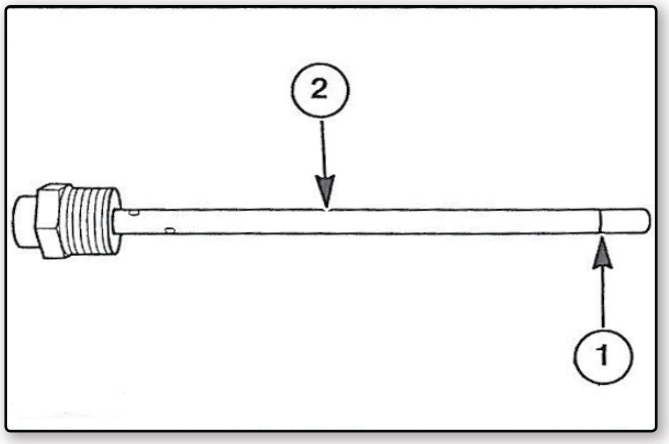

The oil level should be at the full mark, 1, on the oil fill plug/dip stick, 2.

If the oil level is not at the full mark on the oil fill plug/dip stick add SAE 80-90W gear oil level is at the full mark on the oil fill plug/dip stick.

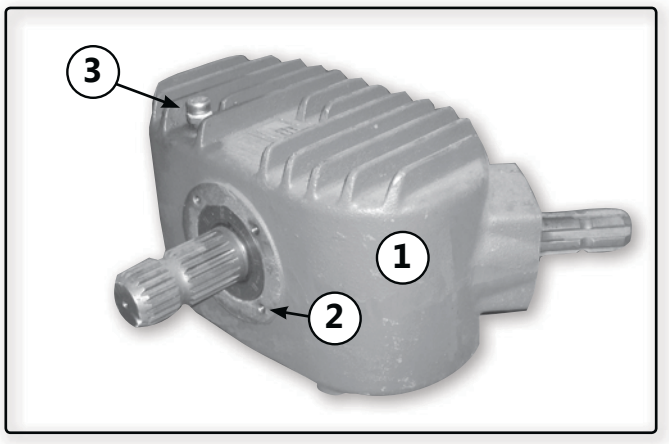

If the gearbox, 1, is overfilled, remove the oil level/drain plug, 2, from the front of the gearbox. Allow the oil to drain out until the proper level is reached on the fill/dip stick, 3, and then screw the oil level/drain plug back into the gearbox.

Screw the oil fill/dip stick, 3, back into the gearbox, 1.

Note: The gearbox is shown with the gearbox shield removed for figure clarity.

GEARBOX MAINTENANCE

Center Section and Wing Gearboxes

Important: When checking the oil level or filling the gearboxes, the cutter must be level.

Note: It may be necessary to jack one end of the cutter up to level out the gearboxes.

Check the oil in the gearboxes every 50 hours. To check the oil level in the divider gearbox remove the oil fill plug/dip stick, 1, from the gearbox.

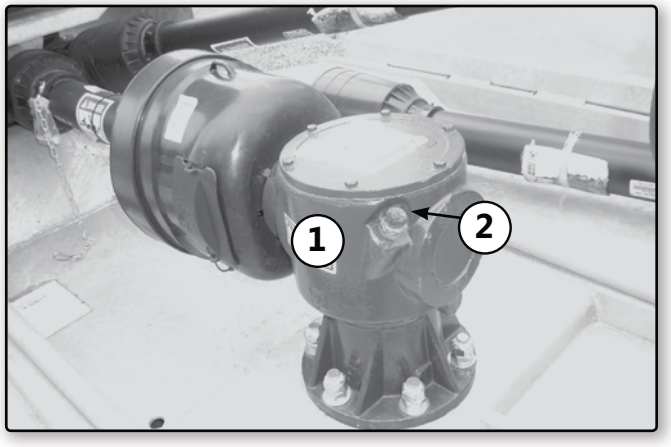

Note: The center gearbox is shown. The left wing gearbox is the same as the center gearbox.

Note: The oil fill plug/dip stick on the right wing gearbox is located at the opposite corner of the gearbox.

The oil level should be at the full mark, 1, on the oil fill [plug/dip stick, 2.

If the oil level is not at the full mark on the oil fill plug/dip stick add SAE 80-90W gear oil level is at the full mark on the oil fill plug/dip stick.

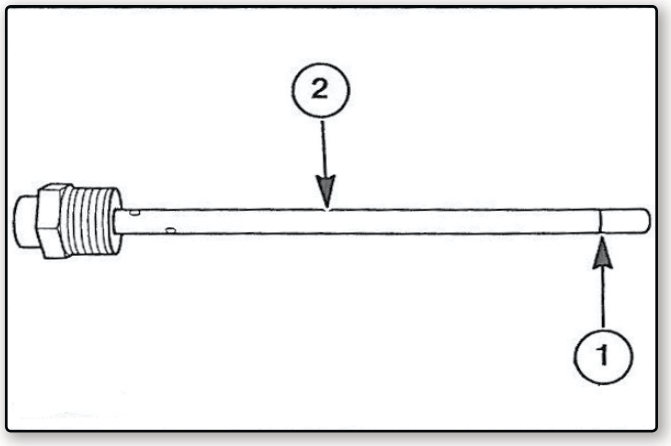

If the gearbox, 1, is overfilled, remove the oil level/drain plug, 2, from the front of the gearbox. Allow the oil to drain out until the proper level is reached on the fill/dip stick, 3, and then screw the oil level/drain plug back into the gearbox.

Screw the oil fill/dip stick, 3, back into the gearbox, 1.

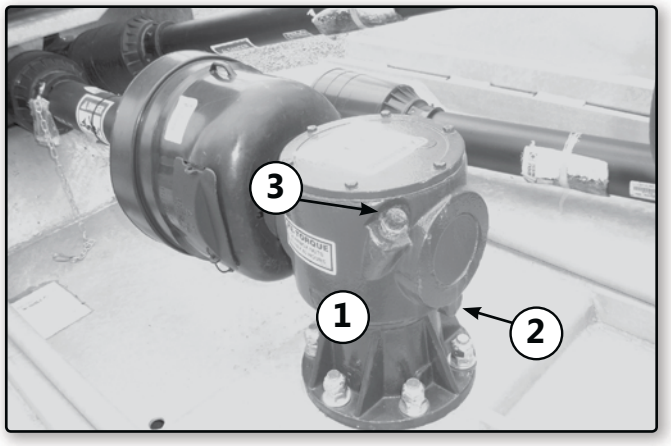

GEARBOX MAINTENANCE

Gearbox Servicing

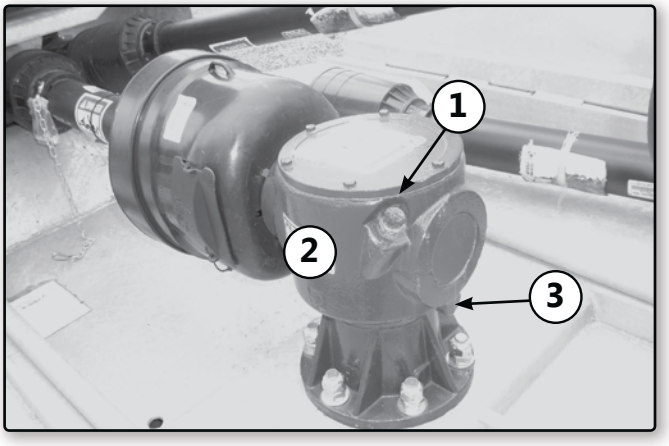

The gearbox oil in the gearboxes should be changed at the initial 50 hours of service, then at every 450 hours.

To remove the old gear oil from the gearboxes use an oil suction gun. Remove the oil fill plug/dip stick, 1, from the top of each gearbox, 2, and insert the tube from the suction gun down into the oil fill hole, then suction the oil out of the gearbox.

Note: The center gearbox is shown. The left wing gearbox is the same as the center gearbox.
Note: The oil fill plug/dip stick on the right wing gearbox is located at the opposite corner of the gearbox.

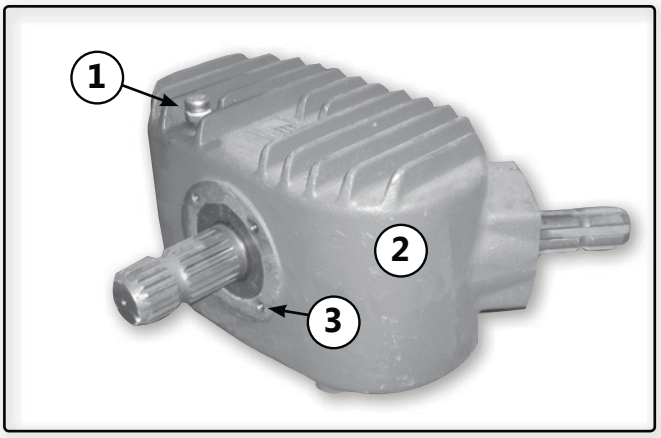

Once all the old gear oil is removed from each of the gearboxes, remove the oil level plug, 3, from the gearboxes.

Note: The oil fill plug/dip stick, 1, is located on the top of the divider gearbox, 2, and the oil level plug, 3, is located on the front of the divider gearbox.
Note: The divider gearbox is shown with the gearbox shield removed for figure clarity.

Add SAE 80-90W gear oil to the gearboxes until oil exits the oil level hole, and then screw the oil level plug and oil fill plug/dip stick back into the gearbox.

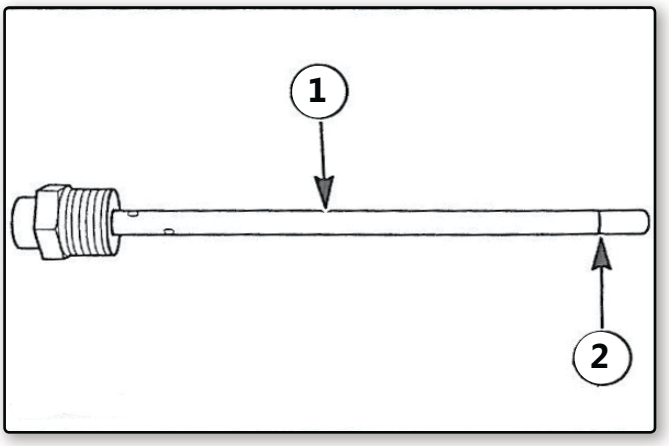

Once the oil level plug is screwed back into the gearbox, recheck the oil level using the fill plug/dip stick.

The oil level should be at the mark, 2, on the fill plug/dip stick.

If the oil level is over the fill mark remove the oil level plug, and allow the oil to drain out until the proper level is reached on the fill plug/dip stick, then screw the oil level plug back into the gearbox.

this page left intentionally blank

BLADE SERVICING

Inspect blade before each use to determine that they are properly installed and in good condition. Replace any blade that is bent, excessively nicked, worn or has any other damage. Small nicks can be ground out when sharpening. Using only original equipment blades on this cutter. They are made of special heat-treated alloy steel. Substitute blades may not meet specification and may be dangerous.

Blade Sharping

Always sharpen both blades at same time to maintain balance. Follow original sharpening pattern as shown in FIGURE 3. Always sharpen blades by grinding. DO NOT heat and pound out edge. Do not sharpen blade to a razor edge, but leave a 1/16" blunt edge. Do not sharpen back side of blade.

IMPORTANT:
When sharpening blades, grind each blade the same amount to maintain balance. The difference in blade weights should not exceed 1 ounce. Unbalanced blades will cause excessive vibration which can damage gear box bearings. Vibration may also cause structural cracks in cutter housing.

Never work under equipment support by a hydraulic device because it may drop if the control is actuated (even with the engine stopped) or in the event of hose failure, etc. Always use a secure support for equipment which must be serviced while in the raised position.

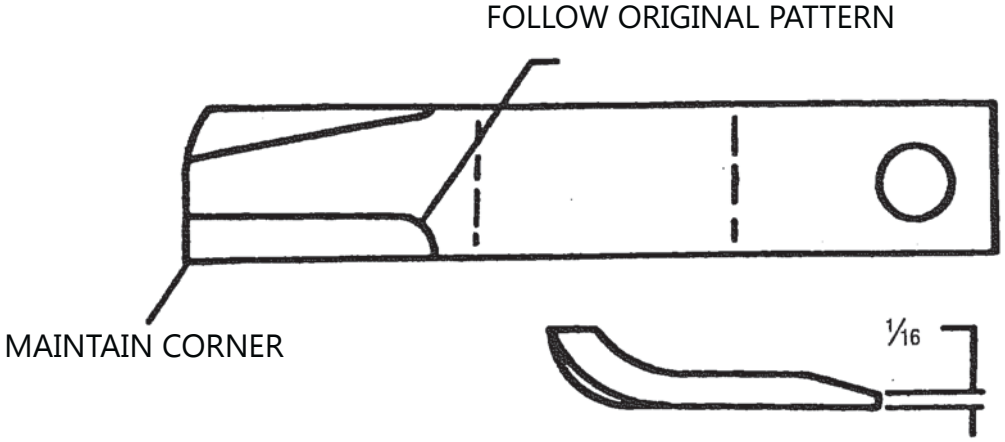

BLADE REMOVAL

To removed blades for sharpening or replacement, remove the cover plate on deck of cutter near each gearbox. Remove locknut from blade bolt. Inspect lock nut after removal and replace if threads or nylon insert are damaged. Always replace nut when replacing bolt. When installing blades, be sure to check blade bolt pivot diameter for wear. Replace bolt if worn more than 1/4 at any point. Install blade bolts with worn side of bolt away from the center of the blade carrier. Tighten lock nut to 300 ft. lbs.

⚠ WARNING

Avoid personal injury. Blade and/or bade carrier removal should be done only with the tractor engine shut off, key removed, in neutral, parking brake on, PTO disengaged, and the cutter blocked in the raised position.

BLADE CARRIER REMOVAL

Remove cotter pin and loosen slotted nut on gear box shaft. Loosen but do not remove the nut until the blade carrier is loosened. Use a suitable two-jaw gear puller to pull carrier tapered gear box shaft. If gear puller is not available use long bar inserted through blade bolt access hole with end against rotor bar. Strike opposite end of bar with sledge hammer. Rotate blade carrier 180 degrees and repeat process.

Note: After a few hours of operation, always recheck blade carrier retaining nut torque.

⚠ WARNING

Avoid personal injury. Do not work under cutter without support blocks to keep frame from falling.

HYDRAULIC HOSES

Replace pinched and broken Hydraulic Hoses at once. Tighten any hydraulic fitting with fluid leaking from it. If fluid still leaks, loosen the fitting, apply a pipe thread compound to the threads and tighten. Care must be exercised when tightening hydraulic fittings. Too much tightening can cause the fittings to crack and required replacement fittings.

SKID SHOES

Skid shoes are made of carbon steel to reduce wear and increase service life. Premature wear can be caused by the cutter wing sections being set too low which allows the wing skid shoes to drag on the ground. Dragging the skid shoes on the ground or running the skid shoes into solid objects can contribute to early frame failure on the cutter. Replace worn skid shoes as required, and tighten bolts regularly. Failure to tighten skid shoe bolts can cause premature failure.

WHEELS BEARINGS

Every six months, the wheel hubs should be removed. Remove, clean, and inspect the bearings making certain that they are free of all signs of pitting, rust decay, or deformation. If any of these problems exist, the cups and cones in the wheel hub should be replaced. Replace the cups and cones as a set. This prevents a continuation of the original problem. If the bearings are in good shape, pack then with grease.

Put the bearing seal back into the wheel hub and replace the hub. Tighten the adjusting nut until there is noticeable drag while turning the wheel. Back of just enough to provide a free-rolling fit. Insert and spread the Cotter Pin. Install the hub cap. Fill the hub completely with #2 bearing grease.

HARDWARE

Check nuts, bolts, and other miscellaneous hardware regularly. Loose hardware is easily lost, cause increased wear on parts, and increase the chance of breakdown. Loose hardware creates potential hazards which could result in personal injury to the operator, support personnel and bystanders. Use the "Torque Chart" below when tightening bolted connections.

RECOMMENDED TORQUE IN FT-LBS (NM) COARSE AND FINE THREADS

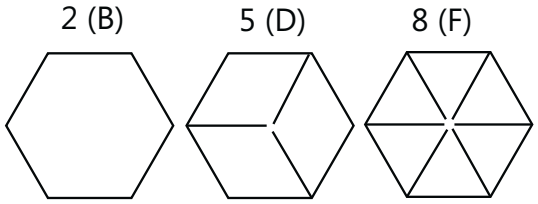

BOLT DIAMETER	PLAIN HEAD	THREE DASHES	SIX DASHES
1/4	not used	10 (14)	14 (19)
5/16	not used	20(27)	30(41)
3/8	not used	35(47)	50(68)
7/16	35(47)	55(75)	80(108)
1/2	55(75)	85(115)	120(163)
9/16	75(102)	130(176)	175(237)
5/8	105(142)	170(230)	240(325)
3/4	185(2510	300(407)	425(576)
7/8	160(217)	445(603)	685(929)
1	250(339)	670(906)	1030(1396)
1 1/8	330(447)	910(1234)	1460(1979)
1 1/4	480(651)	1250(1695)	2060(2793)

ASSEMBLY/PARTS SECTION

CENTER AXLE LEG ASSEMBLY

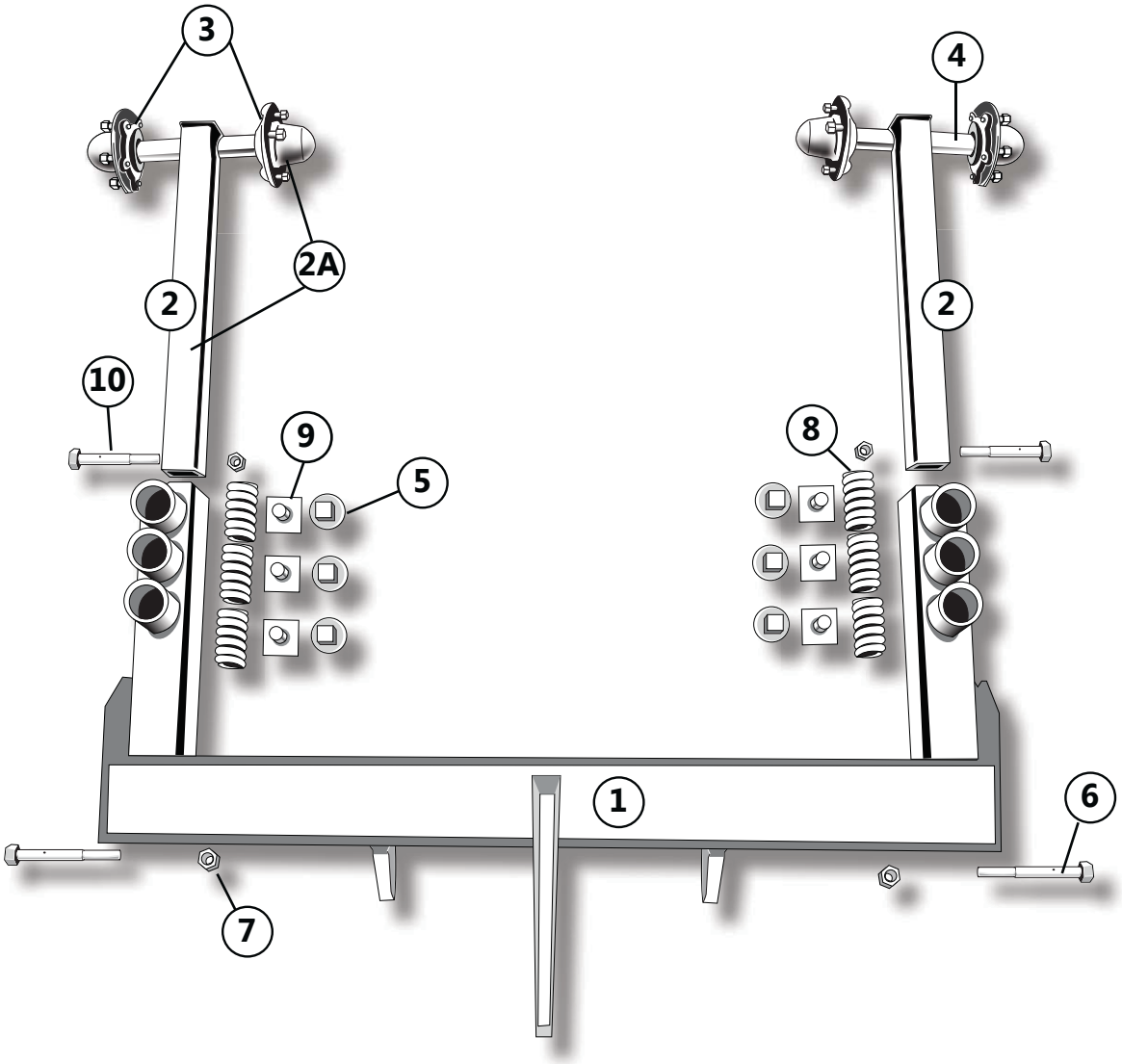

ITEM	PART NO.	DESCRIPTION	QTY.
1	108-4000	CENTER AXLE BEAM	1
2	108-5030	DOUBLE AXLE LEG DOUBLE SPINDLE (NO HUBS)	2
2A	108-5030A	CENTER AXLE LEG DOUBLE SPINDLE & HUBS	2
3	415-0050-00	HUB ASSY	4
4	415-0052	DOUBLE SPINDLE ONLY	2
5	415-2001	SPRING SUPPRESSOR	6
6	412-15477-G	BOLT 1"-8"X7" W/GREASE ZERK	2
7	412-0068	NYLOCK 1"	4
8	415-0025	COMPRESSION SPRING	6
9	108-7000	SPRING LOCATOR	6
10	412-15479	BOLT 1"-8"X8" GR8	2

CHAIN GUARD CENTER DECK FRONT

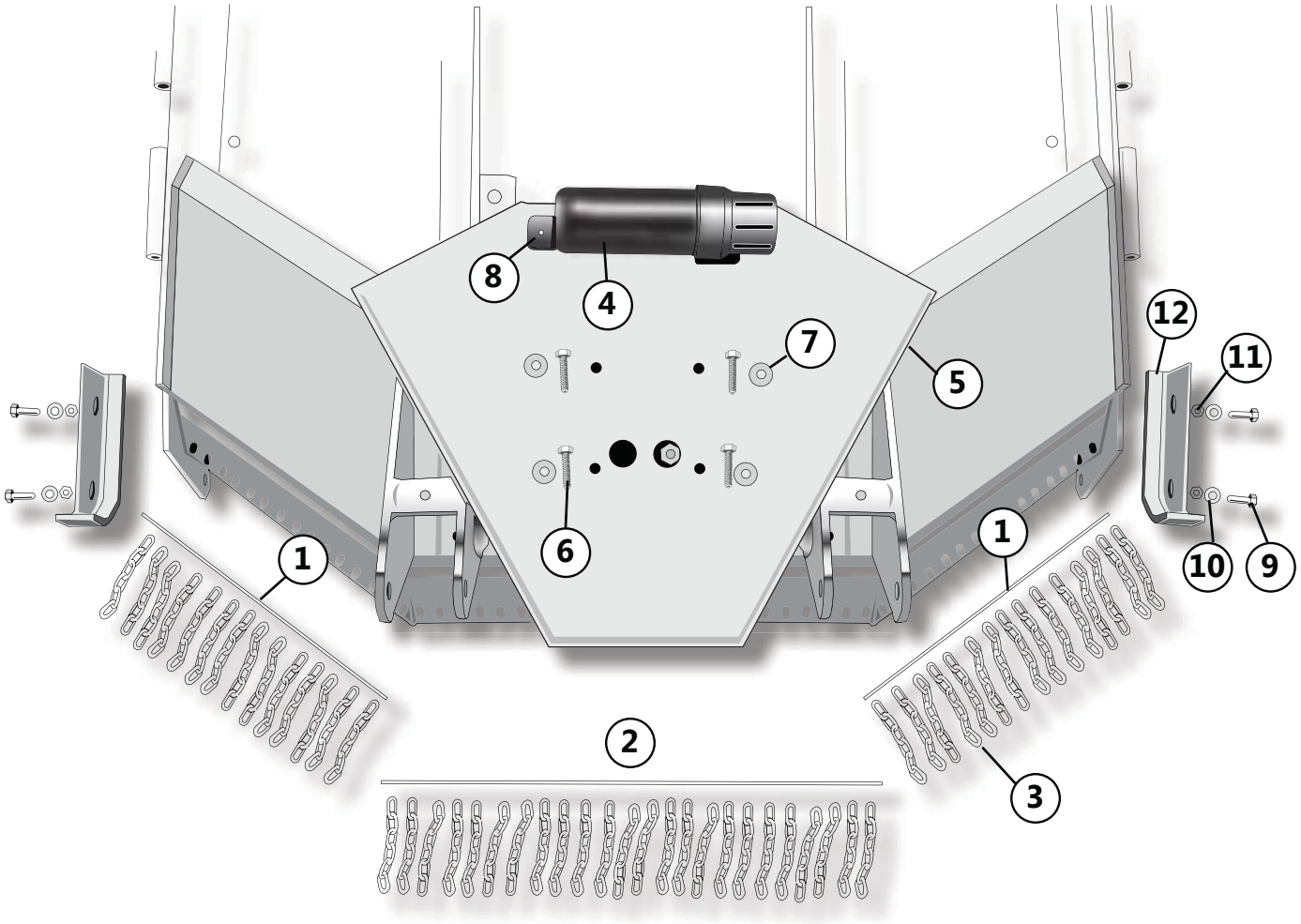

ITEM	PART NO.	DESCRIPTION	QTY.
1	415-1/4X23RD	CHAIN GUARD ROD 23"	2
2	415-1/4X34RD	CHAIN GUARD ROD 34"	1
3	412-6298-6L	CHAIN 6 LINK	53
4	412-9099	MANUAL CANISTER	1
5	101-00070	GEARBOX SHIELD	1
6	412-0042	BOLT 1/2 X 1 1/2	4
7	412-0072-01	FLATWASHER 1/2	4
8	412-31823	SELF TAP SCREW 1/4 X 1	2
9	412-15310	BOLT, 5/8 X 1 3/4 GR8	4
10	412-0076	FLAT WASHER 5/8	4
11	412-5284	NYLOCK NUT 5/8	4
12	116-1687	SKID SHOE	2

SAFETY SHIELD CENTER REAR

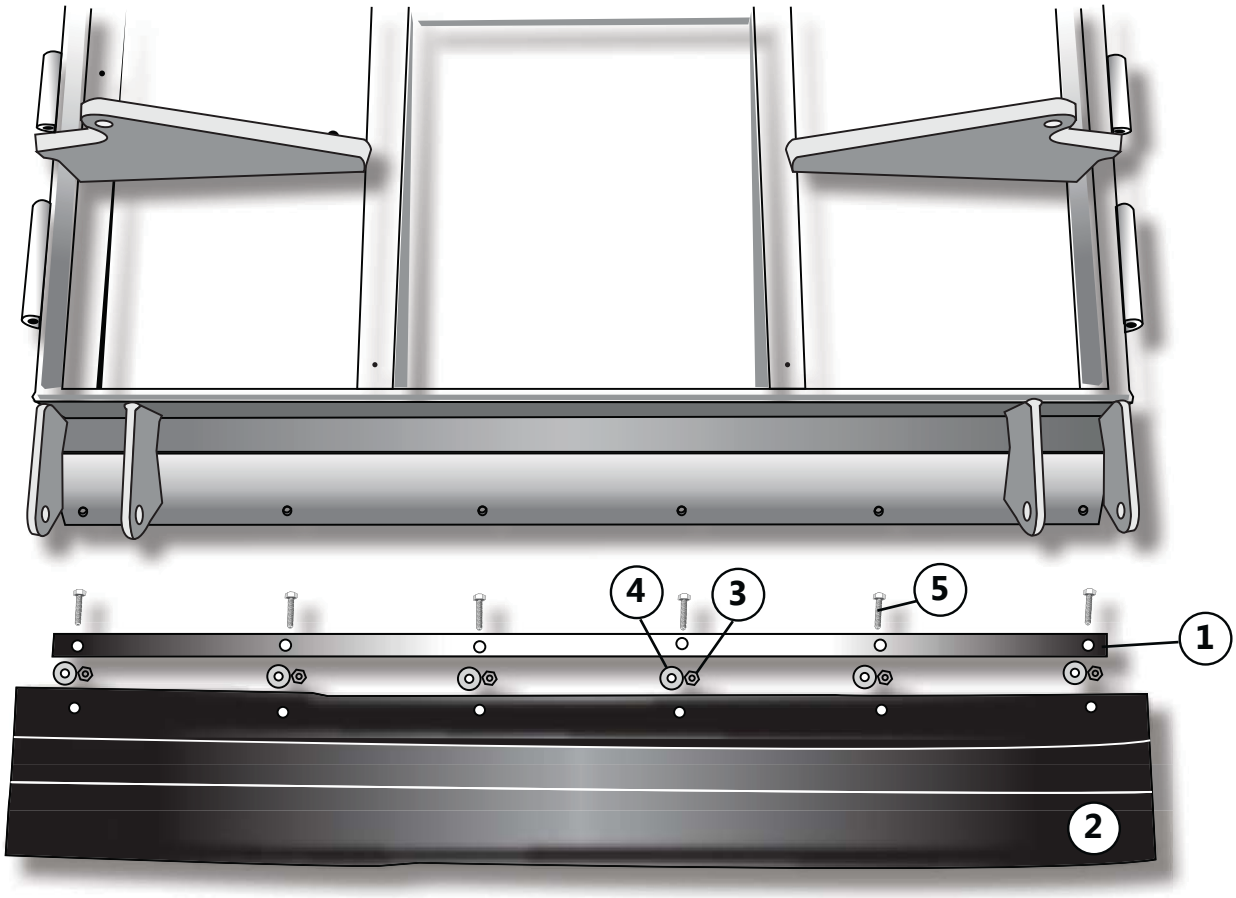

ITEM	PART NO.	DESCRIPTION	QTY.
1	101-1554	DEFLECTOR STRAP	1
2	104-1905	DEFLECTOR SHIELD	1
3	412-0058	NYLOCK NUT 1/2-13	6
4	412-0072-01	FLATWASHER 1/2"	6
5	412-2083	BOLT 1/2 X 2	6

SAFETY SHIELD WING REAR

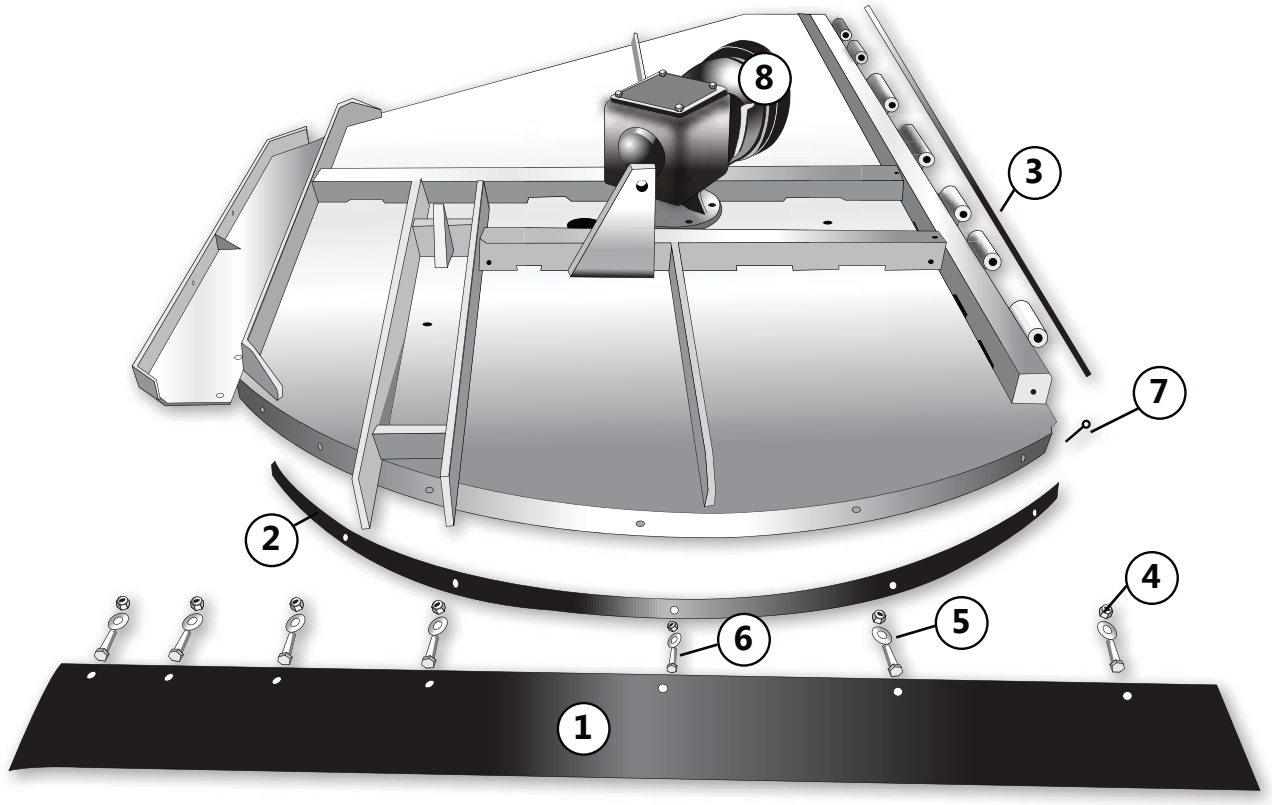

ITEM	PART NO.	DESCRIPTION	QTY.
1	104-1905-WR	WING RUBBER GUARD RIGHT	1
1	104-1905-WL	WING RUBBER GUARD LEFT	1
2	101-1830	DEFLECTOR STRAP	2
3	101-1833	HINGE ROD	2
4	412-3243	NYLOCK NUT 1/2-13	14
5	412-0072-01	FLATWASHER	14
6	412-2083	BOLT 1/2-13 X 2	14
7	900-8951	COTTER PIN	2
8	415-0007	GEARBOX SAFETY CONE	1

TONGUE HITCH ASSEMBLY

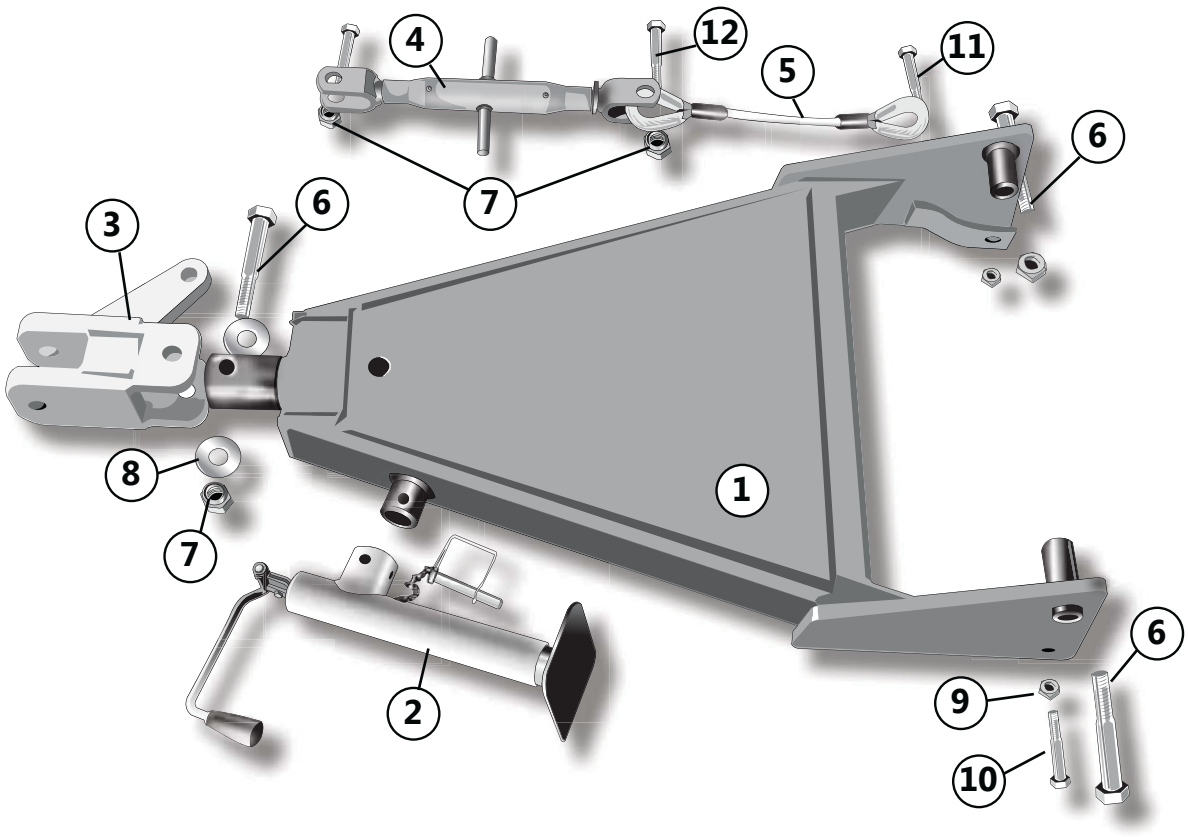

ITEM	PART NO.	DESCRIPTION	QTY.
1	108-1000	WELDED TONGUE	1
2	415-0057	FOLD-UP JACK	1
3	108-6000	HITCH CLEVIS	1
4	159-SL153	TURNBUCKLE	1
5	415-1528	WIREROPE 18”	1
6	412-0586	BOLT 1-8 X 6 1/2	3
7	412-0068	NYLOCK NUT 1-8	5
8	412-7975	FLATWASHER 1”	2
9	412-0060	NYLOCK NUT 3/4 - 10	3
10	412-15365	BOLT 3/4 - 10 X 3 GR8	2
11	412-15367	BOLT 3/4 - 10 X 3 1/2 GR8	1
12	412-0048-01	BOLT 1 X 3 1/2 GR8	2

CHAIN GUARD - WING FRONT LEFT & RIGHT

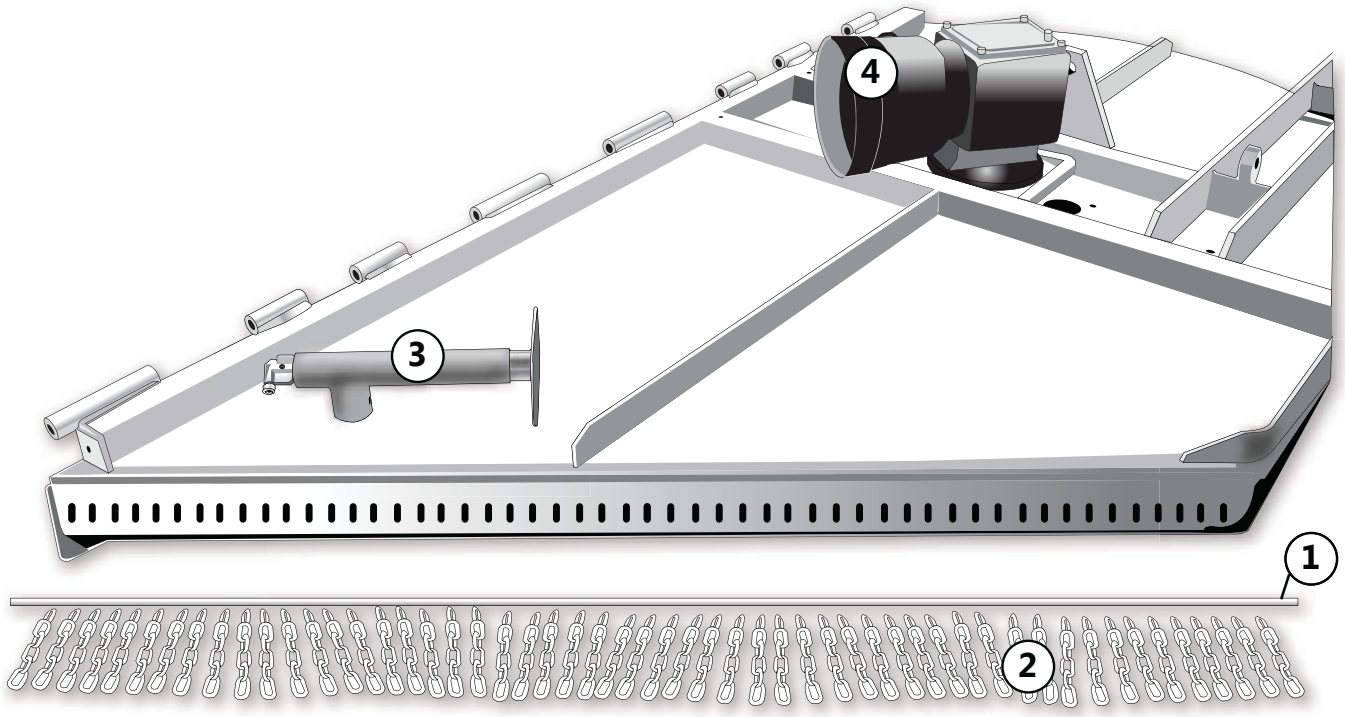

ITEM	PART NO.	DESCRIPTION	QTY.
1	105-114X78RD	CHAIN GUARD ROD	1
2	412-6298-6L	CHAIN 6 LINK	53
3	415-0057	FOLD UP JACK	1
4	415-0007	GEARBOX SAFETY CONE	1

SIDE SKIRT SKID SHOE

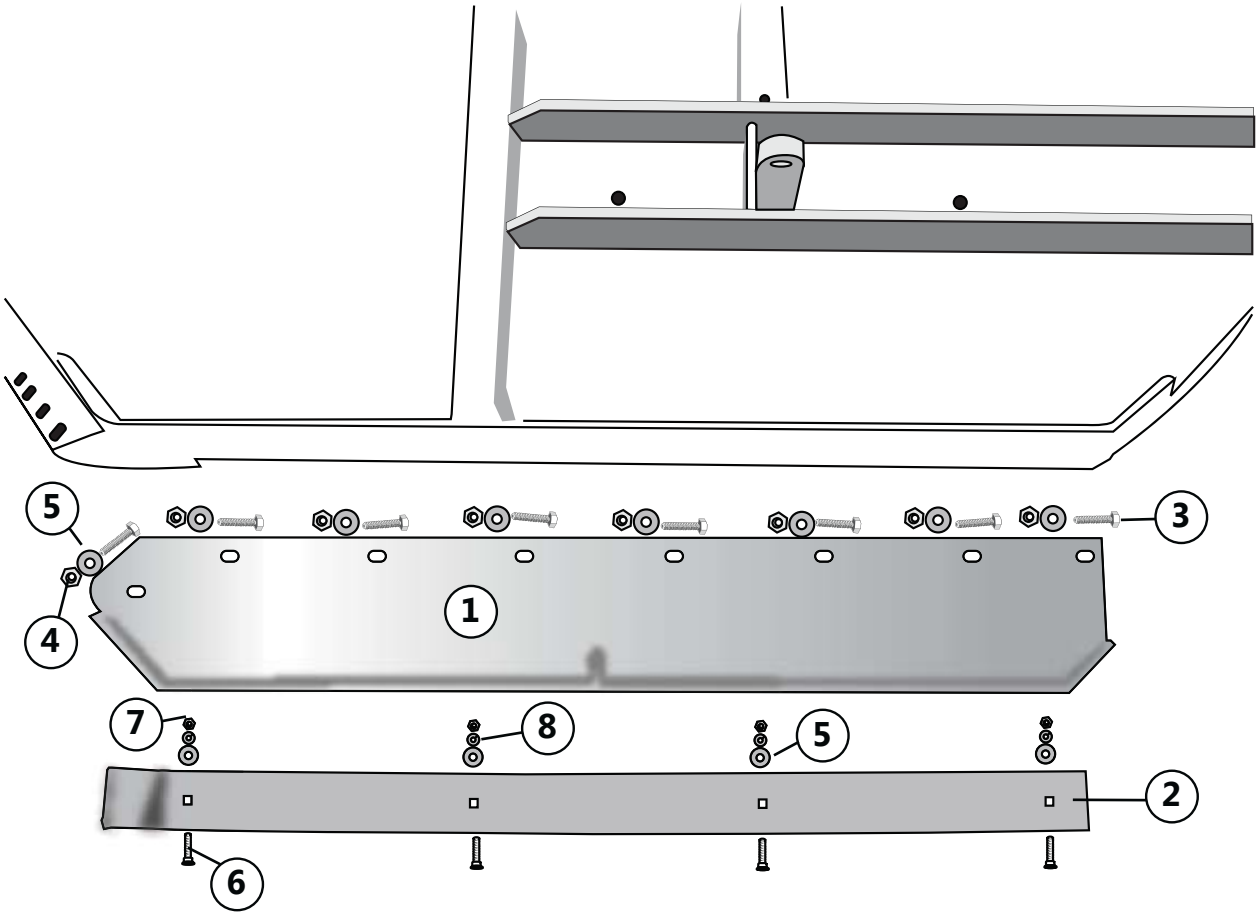

ITEM	PART NO.	DESCRIPTION	QTY.
1	116-9010	RIGHT WING SKIRT	1
	116-9020	LEFT WING SKIRT	1
2	108-6065	SKID SHOE - WING	2
3	412-2083	BOLT 1/2 - 13 X2"	8
4	412-3243	NYLOCK NUT 1/2 - 13	8
5	412-0072-01	FLATWASHER 1/2	8
6	412-03229	PLOW BOLT 3/8 X 1 1/2 GR5	4
7	412-0657	HEX NUT 3/8	4
8	412-0075	LOCKWASHER 3/8	4

WING AXLE LEG ASSY - LEFT & RIGHT

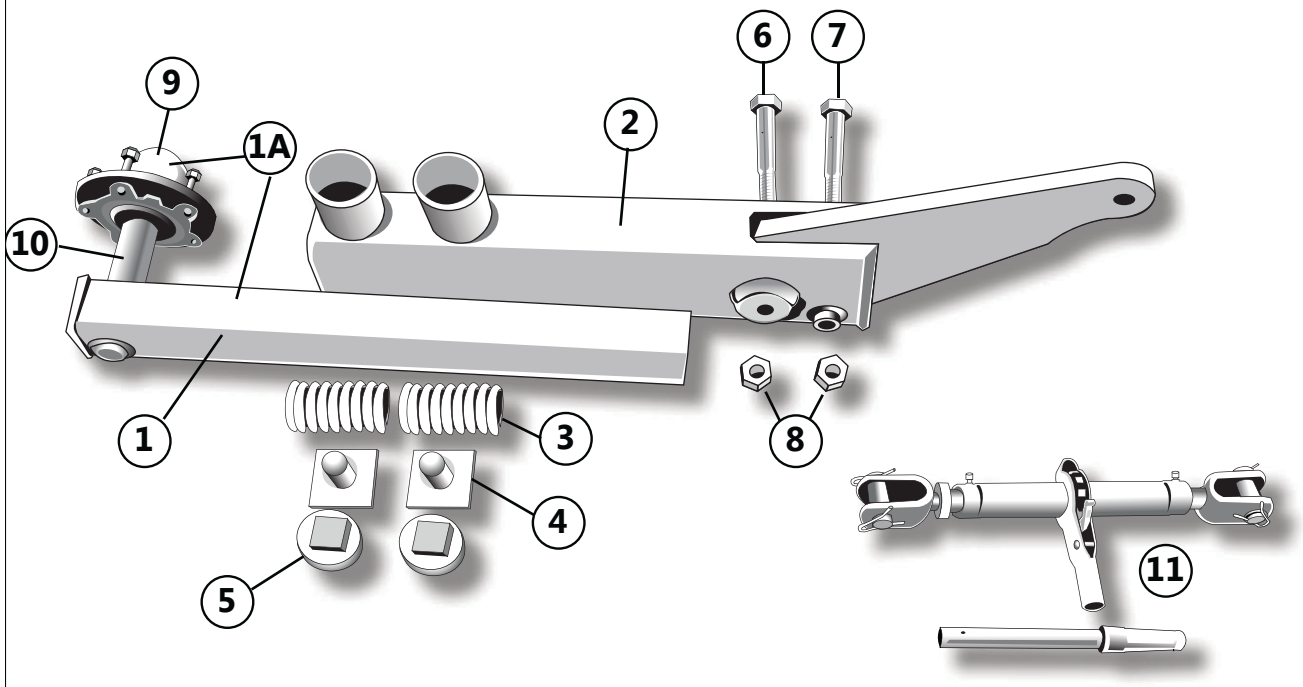

ITEM	PART NO.	DESCRIPTION	QTY.
1	108-3030	WING AXLE LEG & SPINDLE	1
1A	108-3030A	WING AXLE LEG, SPINDLE & HUB ASSY	1
2	108-2000	WING AXLE BEAM	1
3	415-0025	COMPRESSION SPRING	1
4	108-7000	SPRING LOCATOR	1
5	415-2001	SPRING SUPPRESSOR	2
6	412-15477-G	BOLT 1X7 W/GREASE ZERK	1
7	412-15479-G	BOLT 1X8 GR8	1
8	415-0068	NYLOCK NUT 1-8	4
9	415-0050-00	HUB ASSY ONLY	2
10	415-0051	SINGLE SPINDLE	2
11	159-1542	RATCHET JACK & HANDLE	1

CENTER DECK SKID SHOE

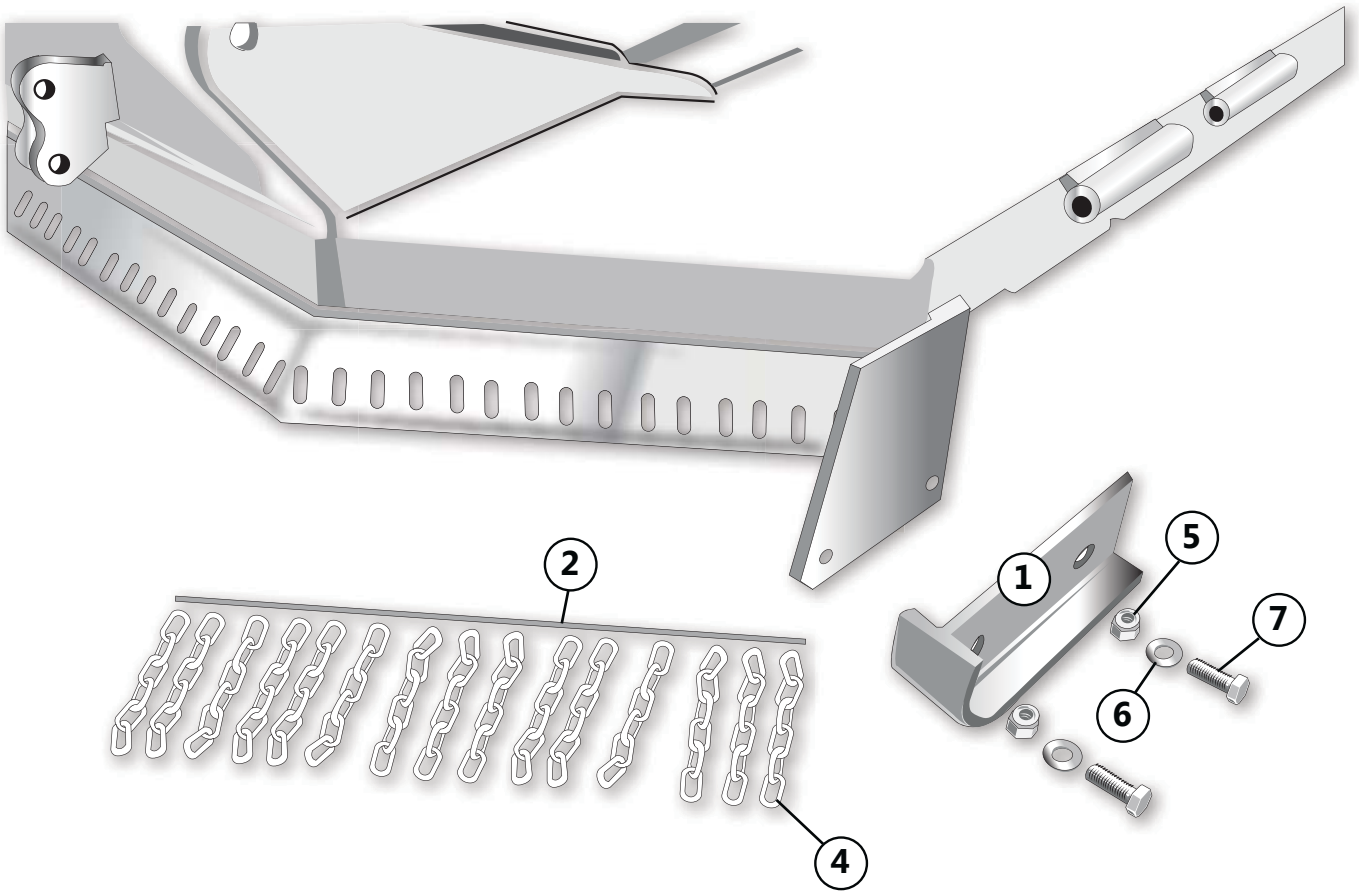

ITEM	PART NO.	DESCRIPTION	QTY.
1	116-1587	SKID SHOE	2
2	415-1/4X23RD	CHAIN GUARD ROD 23"	2
4	412-6298-6L	CHAIN 6 LINK	53
5	412-5284	NYLOCK NUT 5/8-11	2
6	412-0076	FLATWASHER 5/8	2
7	412-15310	BOLT 5/8-11 X 1 3/4 GR8	2

BLADE CARRIERS

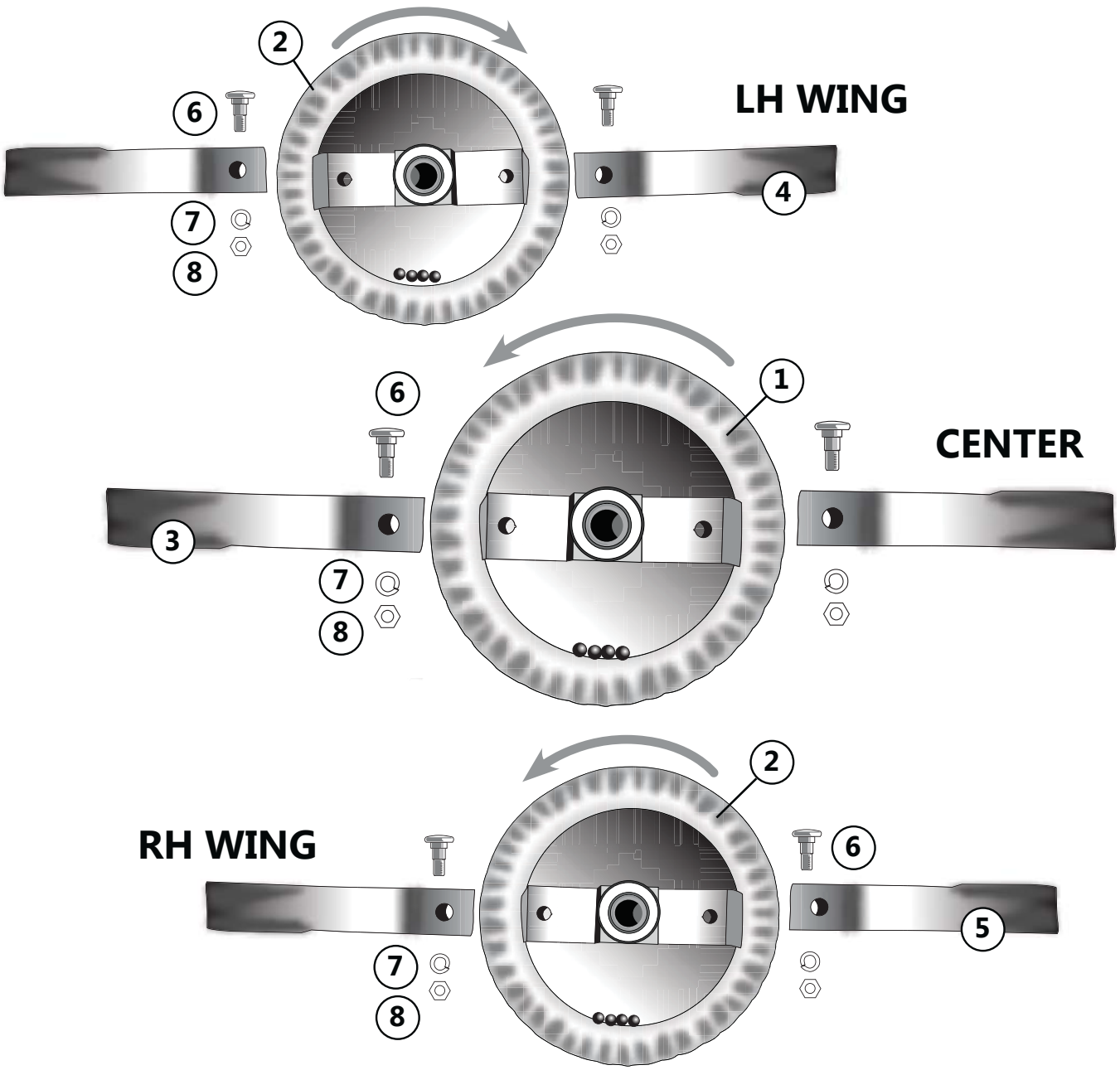

ITEM	PART NO.	DESCRIPTION	QTY.
1	101-0182-02	BLADE CARRIER-CENTER	1
2	101-0183-02	BLADE CARRIER-WING	2
3	800-7556	BLADE, CENTER CCW	2
4	800-11150	BLADE, LH WING CW	2
5	800-7555	BLADE, RH WING CCW	2
6	412-0057-01	BLADE BOLT	6
7	900-8771	LOCKWASHER	6
8	900-8614-01	JAM NUT	6
6-7-8	412-8043-01	BLADE BOLT KIT	6

SELF LEVELING CUTTER FIVE CYLINDER HYDRAULIC CIRCUIT (PHASING CIRCUIT)

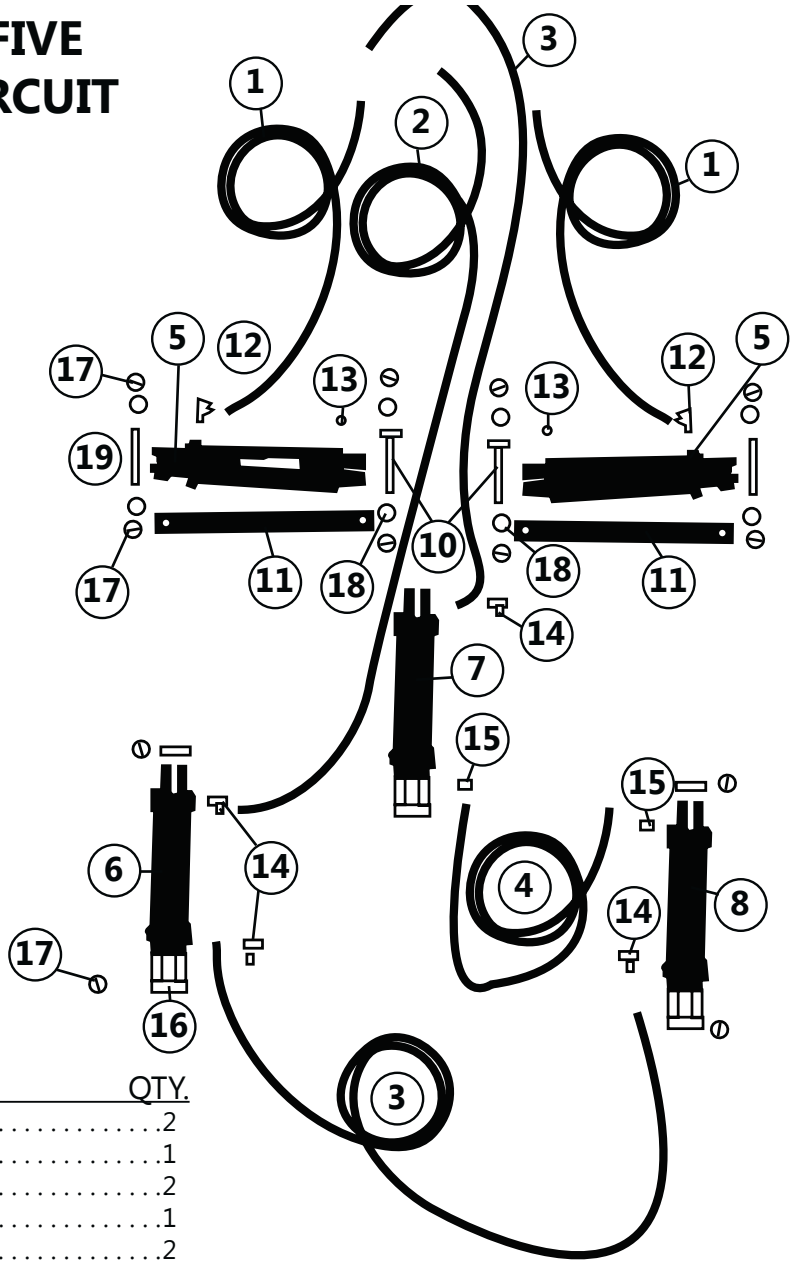

ITEM	PART NO.	DESCRIPTION	QTY.
1	415-0228	HOSE ASSY 228"	2
2	415-0249	HOSE ASSY 249"	1
3	415-0041	HOSE ASSY 195"	2
4	415-0043	HOSE ASSY 90"	1
5	415-0054	WING CYLINDER	2
6	AM-2576	PHASING CYLINDER 3 X 12	1
7	AM-2564	PHASING CYLINDER 3 1/2 X 12	1
8	AM-2570	PHASING CYLINDER 3 1/4 X 12	1
10	150-7104	CLEVIS PIN	2
11	116-1572	TRANSPORT BAR	2
12	800-0202	90 DEGREE RESTRICTOR	2
13	97-2	BREATHER PLUG	2
14	800-0207	90 DEGREE ELBOW	4
15	800-0206	STRAIGHT ADAPTOR	2
16	261-700	CYLINDER PIN	6
17	412-5115	LYNCH PIN	6
18	412-7975	FLATWASHER 1"	2
19	150-6306	CYLINDER PIN	2

LEVELING RODS

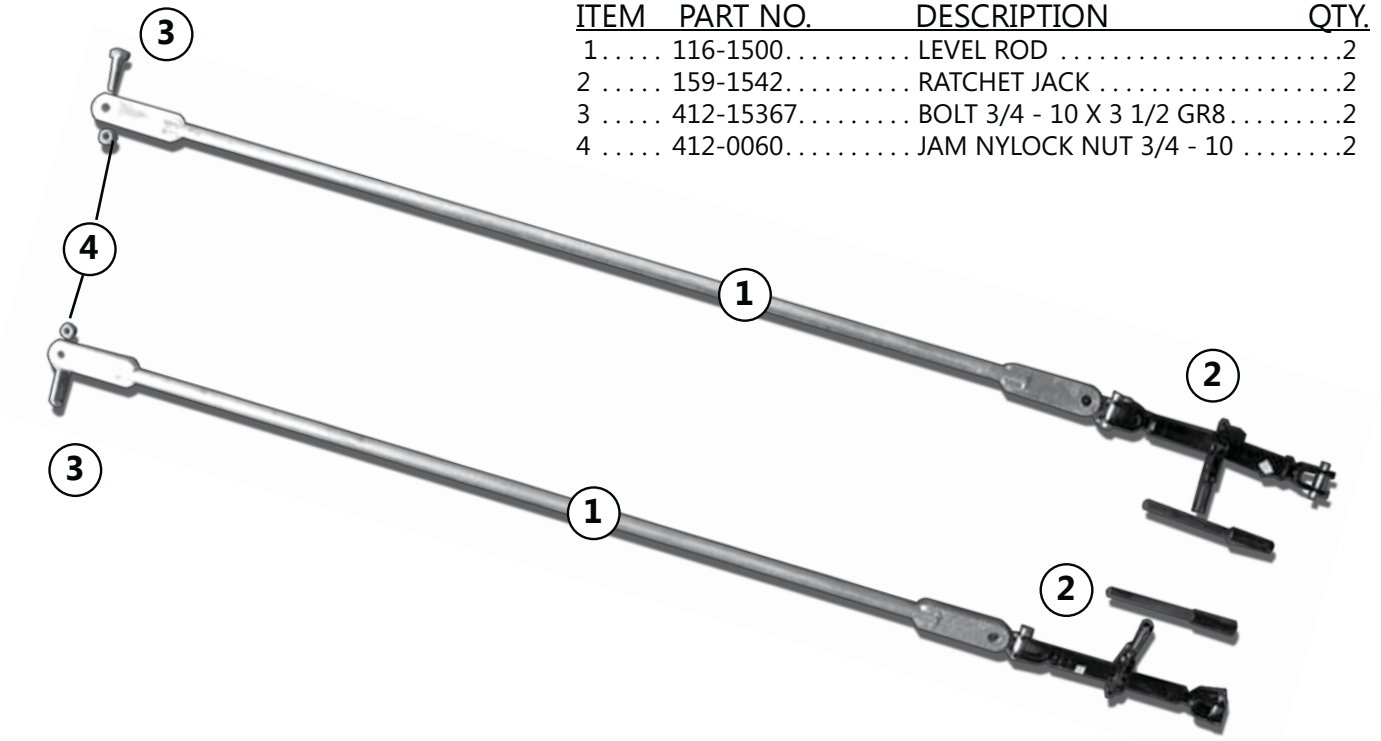

ITEM	PART NO.	DESCRIPTION	QTY.
1	116-1500	LEVEL ROD	2
2	159-1542	RATCHET JACK	2
3	412-15367	BOLT 3/4 - 10 X 3 1/2 GR8	2
4	412-0060	JAM NYLOCK NUT 3/4 - 10	2

HYDRAULIC PHASING CYLINDER FOR LEVEL LIFT SYSTEM

AM-2576
LEFT SIDE

AM-2564
CENTER

AM-2570
RIGHT SIDE

STANDARD CUTTER CYLINDER, CENTER DECK
415-1600

CYLINDER • WING LIFT
415-0054

STANDARD CUTTER - THREE CYLINDER HYDRAULIC CIRCUIT

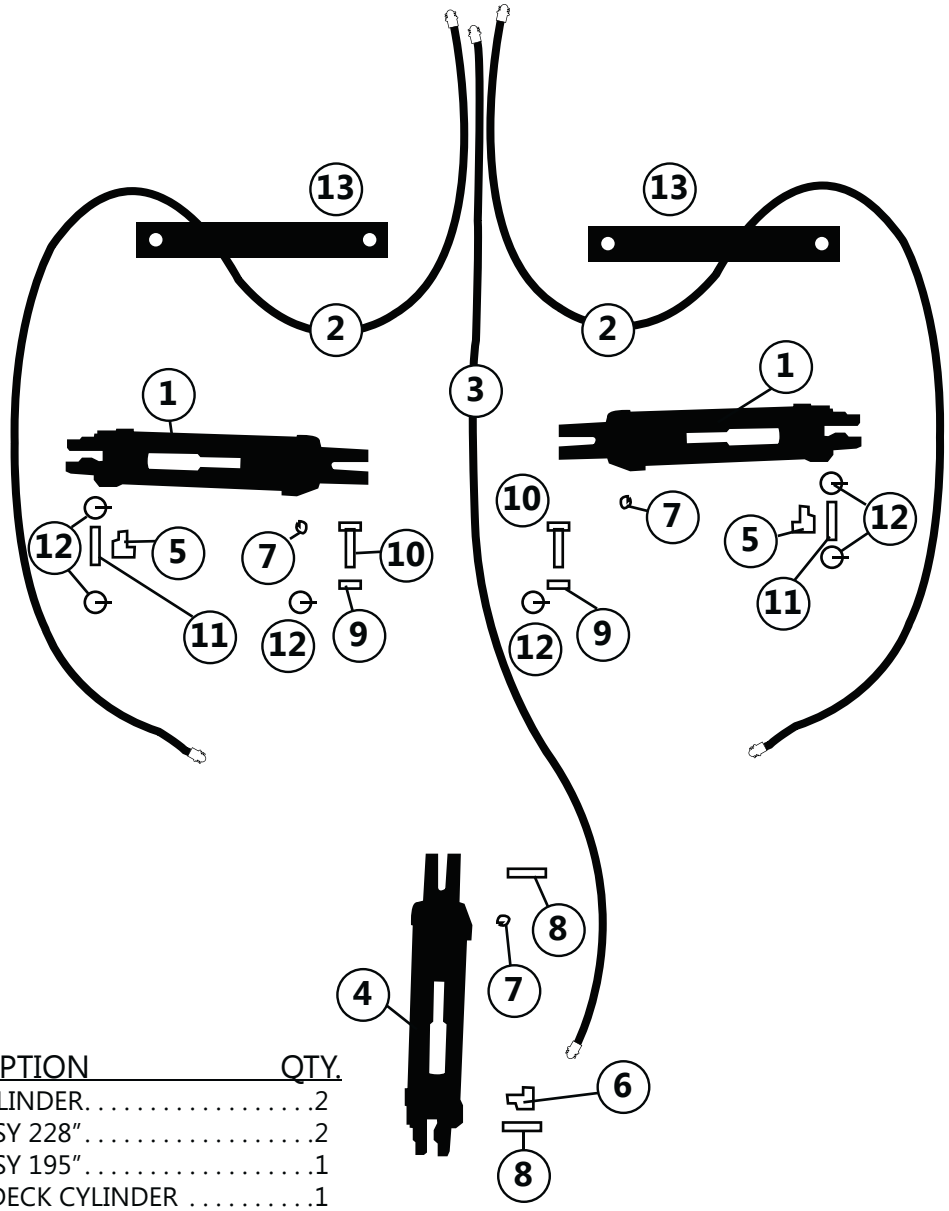

ITEM	PART NO.	DESCRIPTION	QTY.
1	415-0054	WING CYLINDER	2
2	415-0228	HOSE ASSY 228"	2
3	415-0041	HOSE ASSY 195"	1
4	415-1600	CENTER DECK CYLINDER	1
5	800-0202	90 DEGREE RESITRICTOR	2
6	800-0203	90 DEGREE ELBOW	1
7	800-0205	BREATHER PLUG	3
8	261-700	CYLINDER PIN	2
9	412-7975	FLATWASHER	2
10	150-7104	CLEVIS PIN	2
11	150-6306	CYLINDER PIN	2
12	412-1618	LINCH PIN	6
13	116-1572	TRANSPORT BAR	2
NOT PICTURED:			
14	263-46905	SEAL KIT FOR WING CYLINDER	1
15	263-46906	SEAL KIT FOR LIFT CYLINDER	1

WHEEL HUB ASSEMBLY 415-0050-00

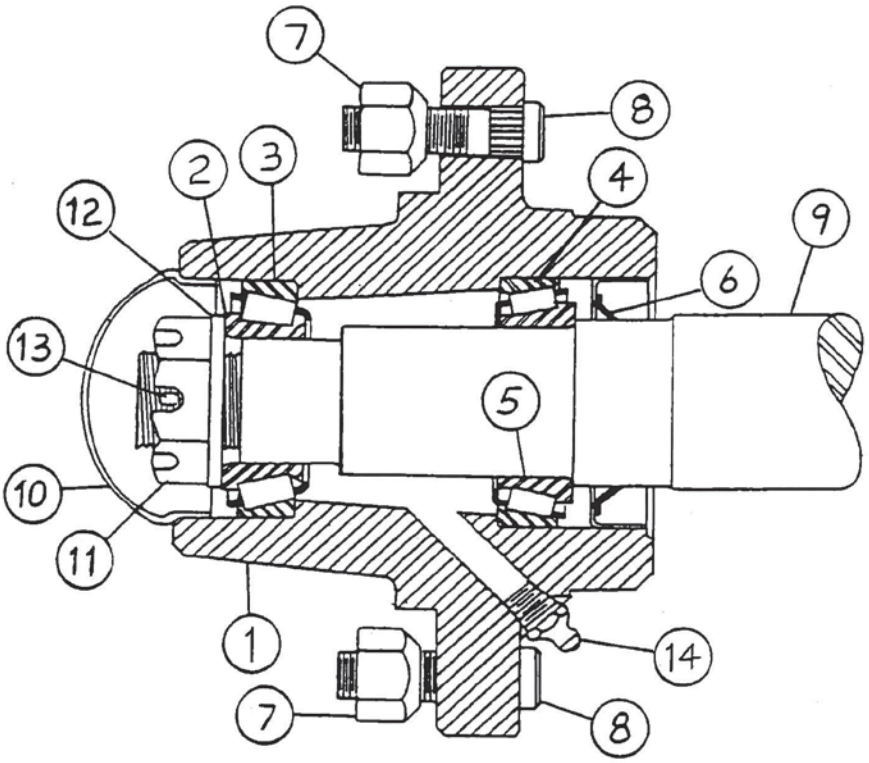

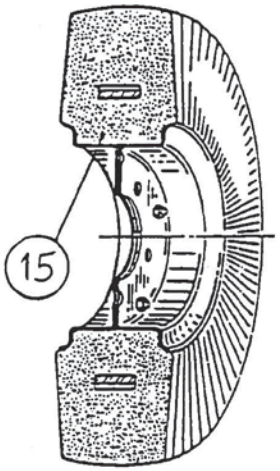

ITEM	PART NO.	DESCRIPTION	QTY.
.....	415-0050-00	HUB COMPLETE LESS SPINDLE	
1	415-0050-01	HUB W/RACES/ STUDS & ZERK	1
2	501-0219	BEARING CONE (OUTSIDE)	1
3	501-0218	BEARING CUP (OUTSIDE)	1
4	900-602406	BEARING CUP (INSIDE)	1
5	900-602416	BEARING CONE (INSIDE)	1
6	415-0050-03	SEAL	1
7	325-2122	NUT	5
8	325-2112	STUD	5
9	415-0051	SPINDLE, SINGLE WHEEL	1
9	415-0052	SPINDLE,DOUBLE WHEEL	1
10	415-0050-05	DUST CAP	1
11	415-0050-02	SLOTTED NUT	1
12	415-0050-04	WASHER	1
13	900-8686	COTTERPIN	1
14	423-1121	GREASE ZERK	1
15	103-211	LAMINATED TIRE 600 X 9	1
OPTIONAL			
401-8812		AIRPLANE TIRE 25.5 X 8 X 14	1

this page left intentionally blank

DIVIDER GEARBOX
415-0004-02(540 RPM) • 415-0004-03(1000RPM)

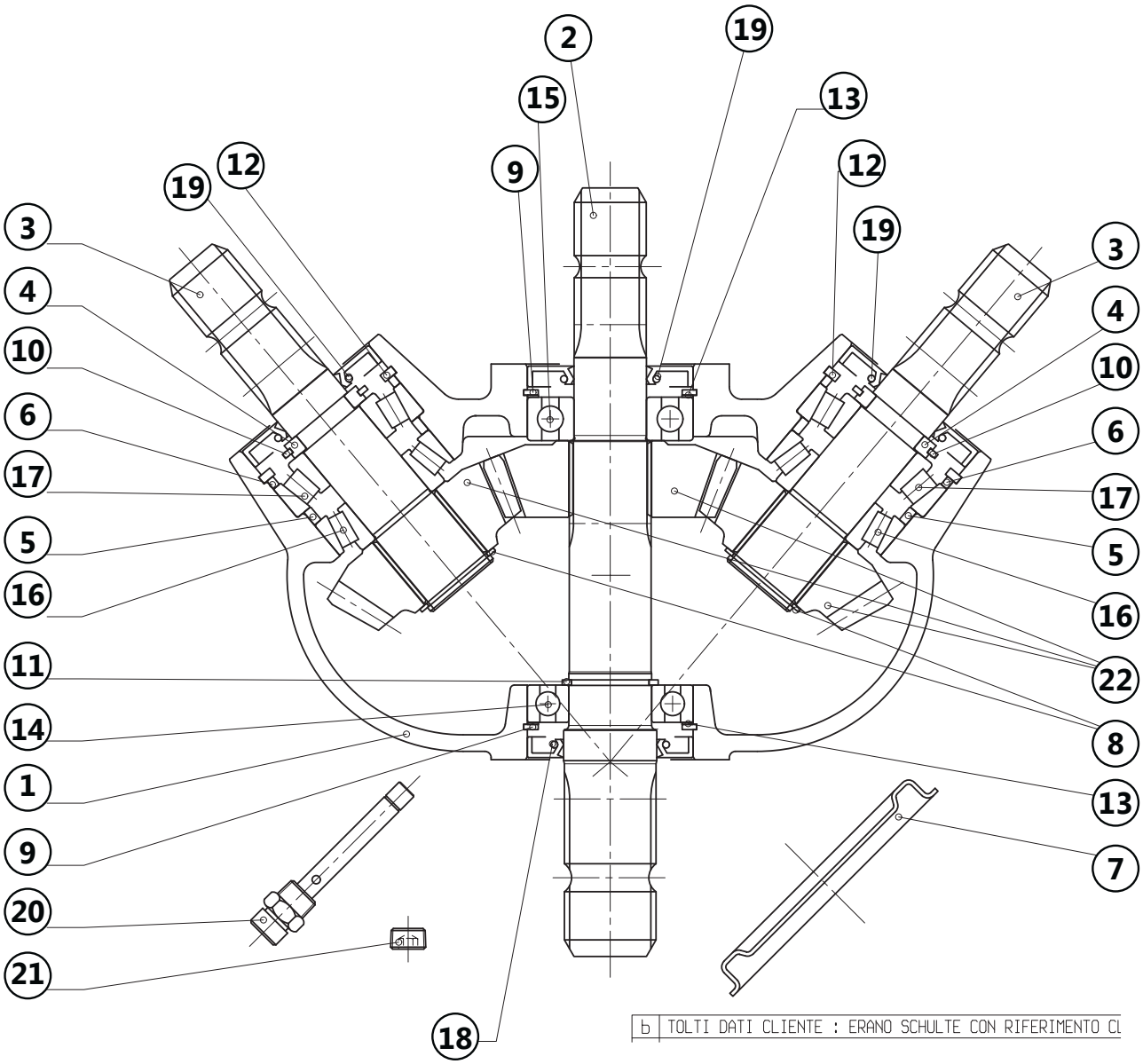

DIVIDER GEARBOX
415-0004-02(540 RPM) • 415-0004-03(1000RPM)

ITEM	PART NO.	DESCRIPTION	QTY.
1	501-0921	MAIN HOUSING	1
2	501-0732	INPUT SHAFT	1
3	501-0733-01	OUTPUT SHAFT	2
4	501-0733-02	SPACER RING	2
5	501-0733-05	SPACER	2
6	501-0733-03	SPACER	2
7	501-0735	COVER	1
8	501-0736	SNAP RING	2
9	501-0738	SNAP RING	2
10	501-0733-04	SNAP RING	2
11	501-0739	SNAP RING	1
12	501-0733-06	SNAP RING	2
13	501-0733-07	SHIM PACK	2
14	501-0025	BALL BEARING	1
15	501-0751	BALL BEARING	1
16	501-0752	BEARING & RACE	2
17	501-0716	BEARING & RACE	2
18	501-0753	OIL SEAL	1
19	501-0718	OIL SEAL	3
20	501-0722	OIL PLUG	1
21	501-0754	OIL PLUG	1
22	501-0755SS	BEVEL GEAR SET 540 RPM	1
	501-0761S	BEVEL GEAR SET 1000 RPM	1

GEAR BOX LEFT WING & CENTER DECK (540 RPM) 415-0005

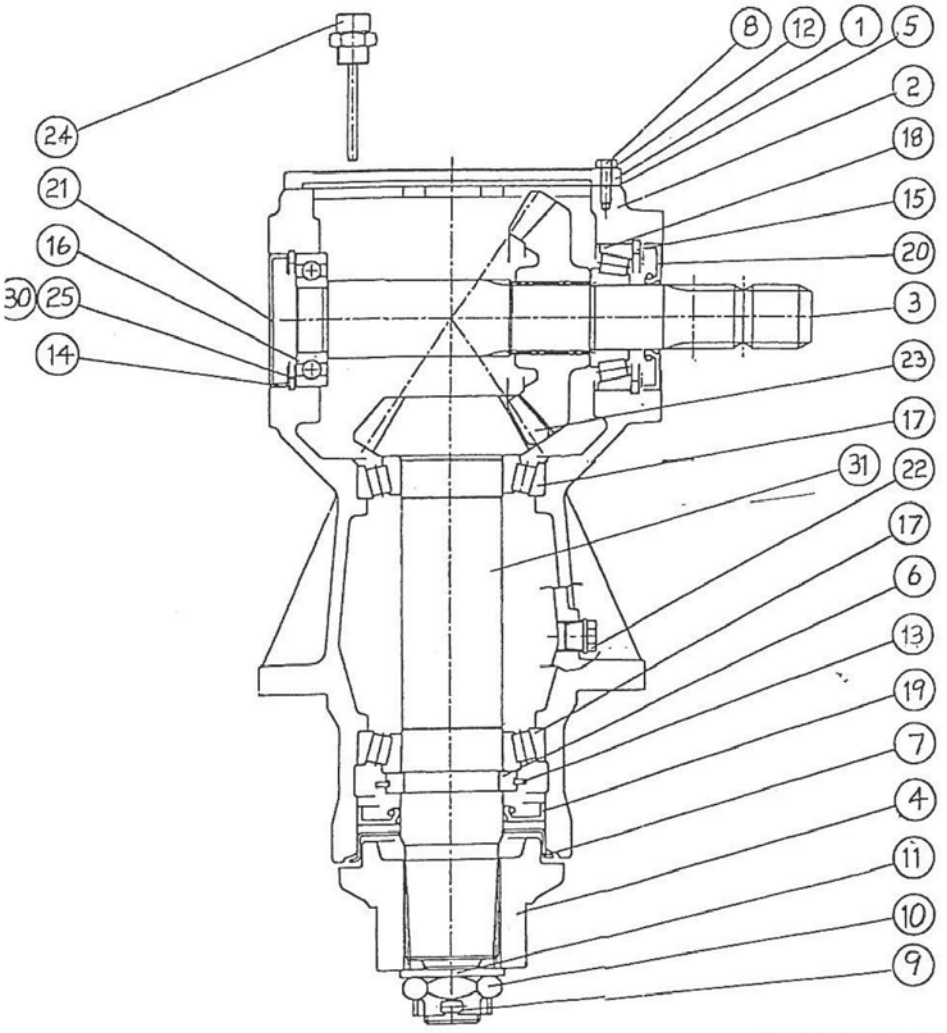

GEAR BOX LEFT WING & CENTER DECK (540 RPM) 415-0005

ITEM	PART NO.	DESCRIPTION	QTY.
1	501-0700	COVER	1
2	501-0701	HOUSING	1
3	501-0702	INPUT SHAFT	1
4	501-0703	SPLINED HUB	1
5	501-0704	GASKET	1
6	501-0705	SEMI RING	1
7	501-0706	SEAL PROTECTOR	1
8	501-0707	CAP SCREW	6
9	501-0708	COTTER PIN	1
10	501-0709	HEXAGON SLOTTED NUT	1
11	501-0710	FLAT WASHER	1
12	501-0711	WASHER	6
13	501-0712	SNAP RING	1
14	501-0713	SNAP RING	1
15	501-0714	SNAP RING	1
16	501-0011	BEARING	1
17	501-0715	BEARING CUP & CONE	2
18	501-0716	BEARING CUP & CONE	1
19	501-0717	SEAL	1
20	501-0718	SEAL	1
21	501-0719	CAP	1
22	501-0720	OIL DRAIN PLUG	1
23	501-0721-01	GEAR & SHAFT SET	1
24	501-0722	OIL PLUG	1
25	501-0723	SHIM	VAR
26	501-0724	SHIM	VAR
27	501-0725	SHIM	VAR
28	501-0726	SHIM	VAR
29	501-0727	SHIM	VAR
30	501-0728	SHIM	VAR
31	501-0721-01	SHAFT & GEAR SET	1

GEAR BOX RIGHT WING (540 RPM) 415-0006

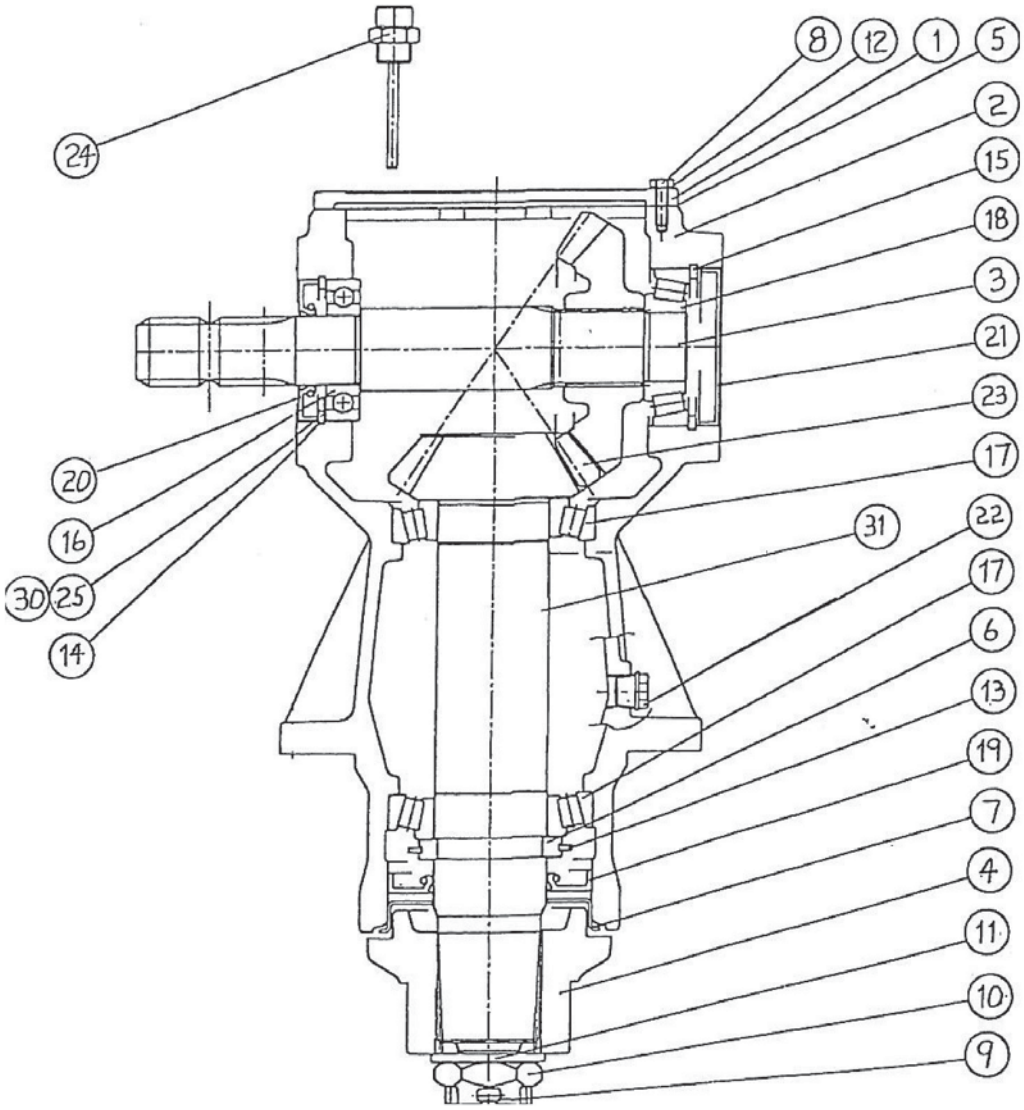

GEAR BOX RIGHT WING (540 RPM) 415-0006

ITEM	PART NO.	DESCRIPTION	QTY.
1	501-0700	COVER	1
2	501-0701	HOUSING	1
3	501-0729	INPUT SHAFT	1
4	501-0703	SPLINED HUB	1
5	501-0704	GASKET	1
6	501-0705	SEMI RING	1
7	501-0706	SEAL PROTECTOR	1
8	501-0707	CAP SCREW	6
9	501-0708	COTTER PIN	1
10	501-0709	HEXAGON SLOTTED NUT	1
11	501-0710	FLAT WASHER	1
12	501-0711	WASHER	6
13	501-0712	SNAP RING	1
14	501-0713	SNAP RING	1
15	501-0714	SNAP RING	1
16	501-0011	BEARING	1
17	501-0715	BEARING CUP & CONE	2
18	501-0716	BEARING CUP & CONE	1
19	501-0717	SEAL	1
20	501-0772	SEAL	1
21	501-0730	CAP	1
22	501-0720	OIL DRAIN PLUG	1
23	501-0721-01	GEAR & SHAFT SET	1
24	501-0722	OIL PLUG	1
25	501-0723	SHIM	VAR
26	501-0724	SHIM	VAR
27	501-0725	SHIM	VAR
28	501-0726	SHIM	VAR
29	501-0727	SHIM	VAR
30	501-0728	SHIM	VAR
31	501-0721-01	SHAFT & GEAR SET	1

GEAR BOX LEFT WING (1000 RPM) 415-0005-01

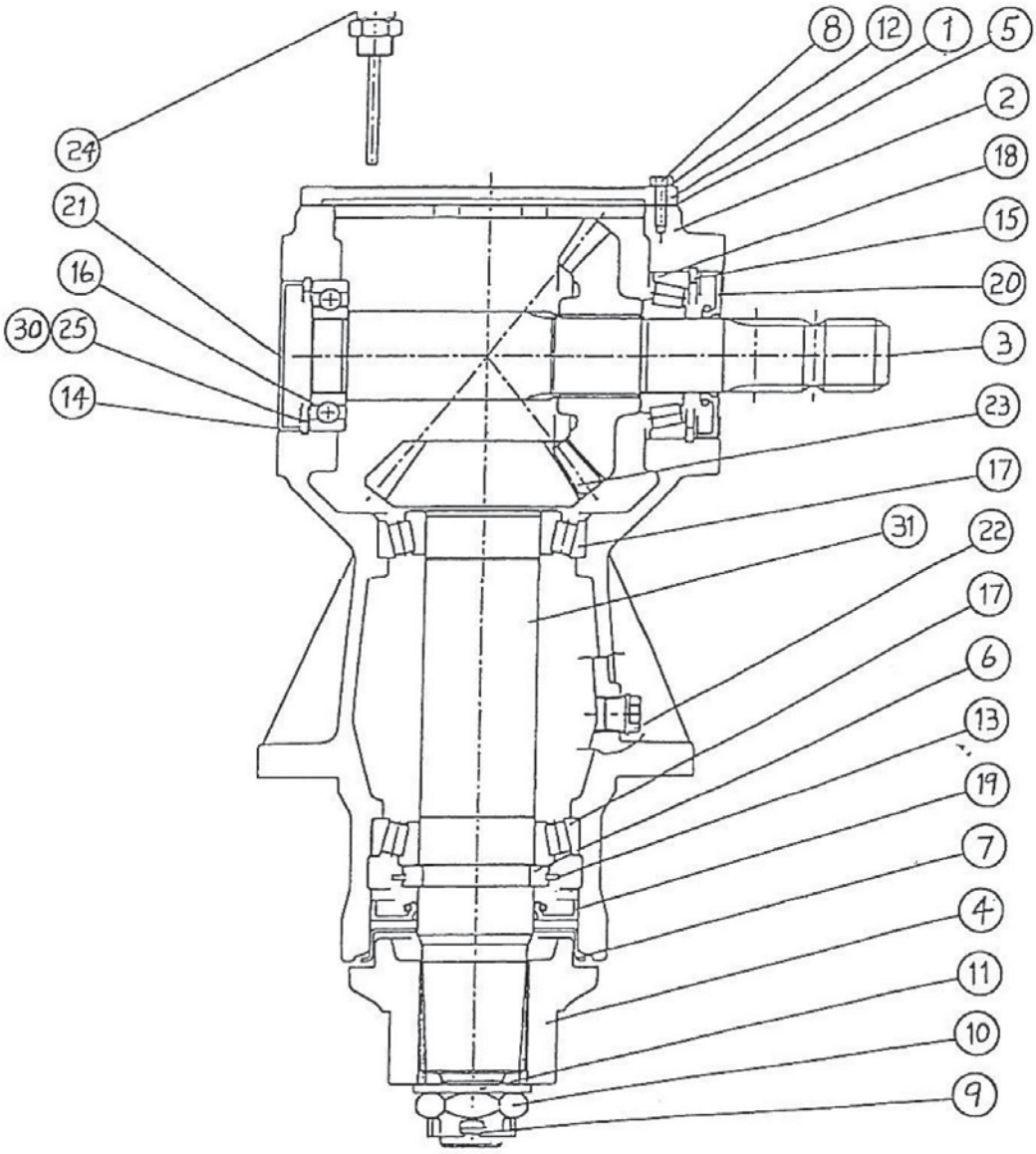

GEAR BOX LEFT WING (1000 RPM) 415-0005-01

ITEM	PART NO.	DESCRIPTION	QTY.
1	501-0700	COVER	1
2	501-0701	HOUSING	1
3	501-0702	INPUT SHAFT	1
4	501-0703	SPLINED HUB	1
5	501-0704	GASKET	1
6	501-0705	SEMI RING	1
7	501-0706	SEAL PROTECTOR	1
8	501-0707	CAP SCREW	6
9	501-0708	COTTER PIN	1
10	501-0709	HEXAGON SLOTTED NUT	1
11	501-0710	FLAT WASHER	1
12	501-0711	WASHER	6
13	501-0712	SNAP RING	1
14	501-0713	SNAP RING	1
15	501-0714	SNAP RING	1
16	501-0011	BEARING	1
17	501-0715	BEARING CUP & CONE	2
18	501-0716	BEARING CUP & CONE	1
19	501-0017	SEAL	1
20	501-0718	SEAL	1
21	501-0719	CAP	1
22	501-0720	OIL DRAIN PLUG	1
23	501-0762	GEAR & SHAFT SET	1
24	501-0722	OIL PLUG	1
25	501-0723	SHIM	VAR
26	501-0724	SHIM	VAR
27	501-0725	SHIM	VAR
28	501-0726	SHIM	VAR
29	501-0727	SHIM	VAR
30	501-0728	SHIM	VAR
31	501-0762	SHAFT & GEAR SET	1

GEAR BOX CENTER DECK (1000 RPM) 415-0005-02

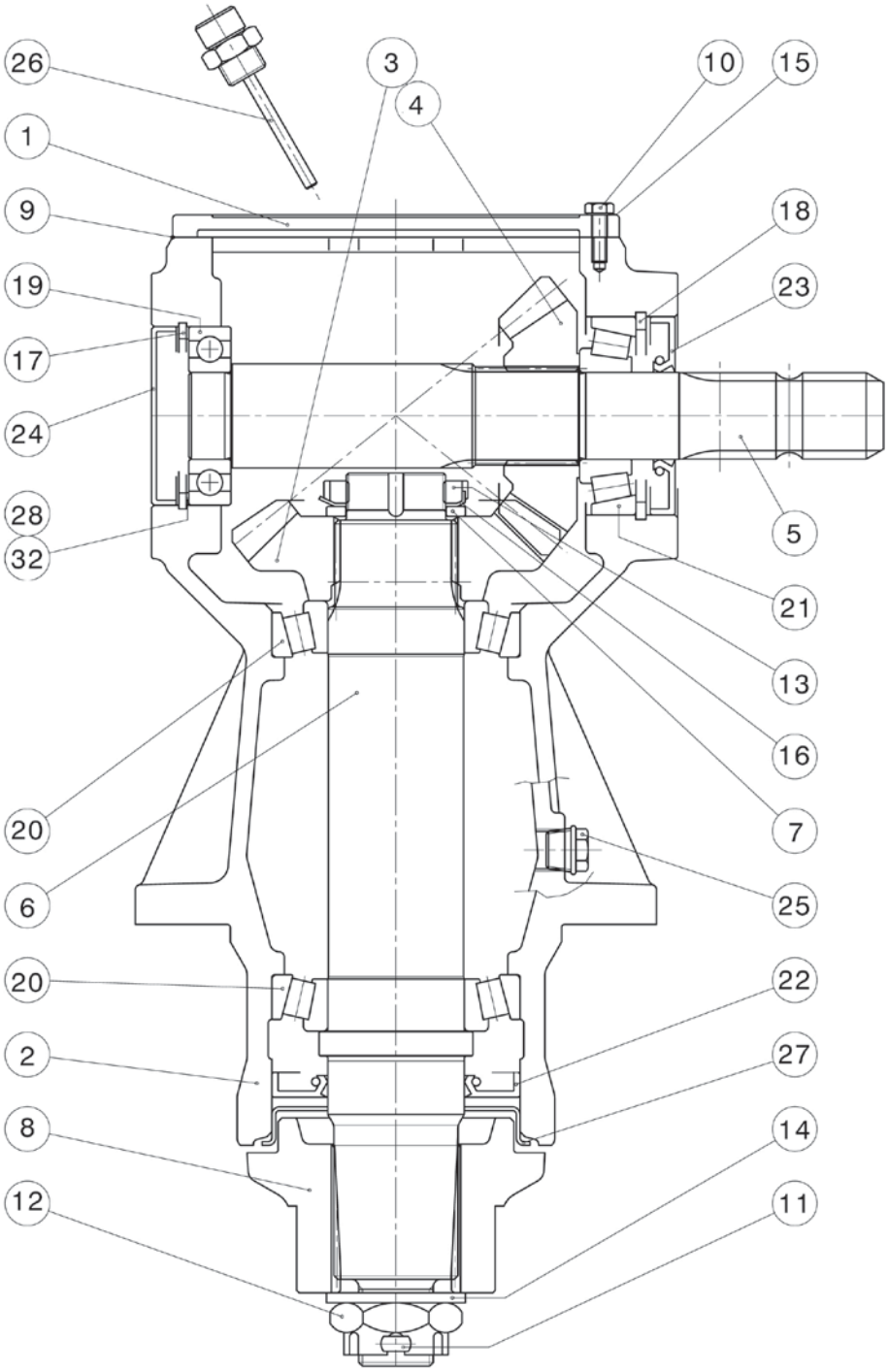

GEAR BOX CENTER DECK (1000 RPM) 415-0005-02

ITEM	PART NO.	DESCRIPTION	QTY.
1	501-0700	COVER	1
2	501-0701	HOUSING	1
3	501-0763	GEAR	1
4	501-0764	GEAR	1
5	501-0702	INPUT SHAFT	1
6	501-0765	OUTPUT SHAFT	1
7	501-0766	SPACER	1
8	501-0703	SPLINED HUB	1
9	501-0704	GASKET	1
10	501-0707	CAP SCREW	6
11	501-0708	COTTER PIN	1
12	501-0709	HEX SLOTTED NUT	1
13	501-0767	RING NUT	1
14	501-0710	WASHER	1
15	501-0711	LOCKWASHER	6
16	501-0768	WASHER	1
17	501-0712	SNAP RING	1
18	501-0714	SNAP RING	1
19	501-0011	BEARING	1
20	501-0715	BEARING CAP & CONE	2
21	501-0716	BEARING CAP & CONE	1
22	501-0717	SEAL	1
23	501-0718	SEAL	1
24	501-0719	CAP	1
25	501-0720	OIL DRAIN PLUG	1
26	501-0722	OIL PLUG	1
27	501-0706	SEAL PROTECTOR	1
28	501-0723	SHIM	VAR
29	501-0724	SHIM	VAR
30	501-0725	SHIM	VAR
31	501-0726	SHIM	VAR
32	501-0727	SHIM	VAR

GEAR BOX RIGHT WING (1000 RPM) 415-0005-03

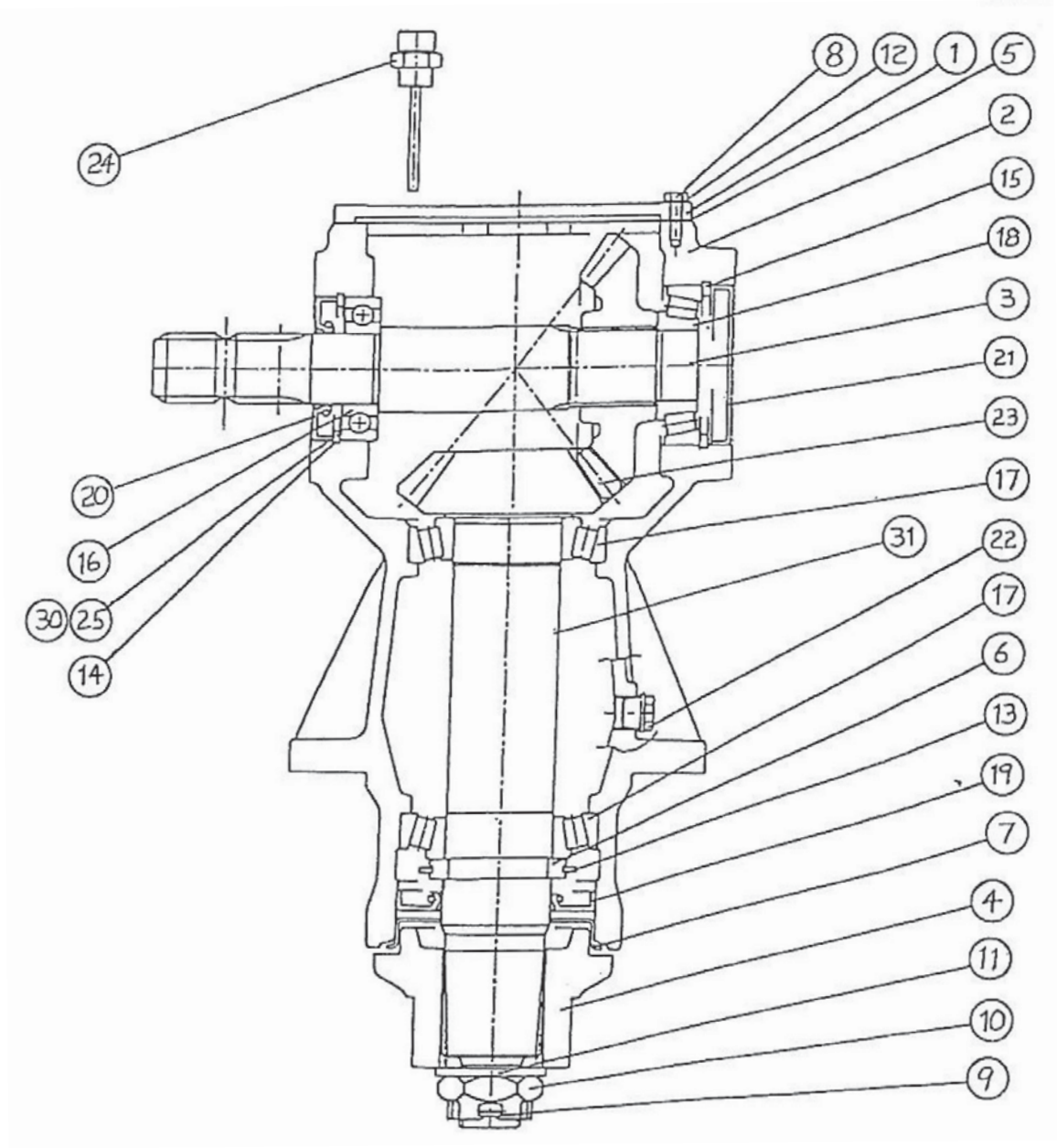

GEAR BOX RIGHT WING (1000 RPM) 415-0005-03

ITEM	PART NO.	DESCRIPTION	QTY.
1	501-0700	COVER	1
2	501-0701	HOUSING	1
3	501-0729	INPUT SHAFT	1
4	501-0703	SPLINED HUB	1
5	501-0704	GASKET	1
6	501-0705	SEMI RING	1
7	501-0706	SEAL PROTECTOR	1
8	501-0707	CAP SCREW	6
9	501-0708	COTTER PIN	1
10	501-0709	HEXAGON SLOTTED NUT	1
11	501-0710	FLAT WASHER	1
12	501-0711	WASHER	6
13	501-0712	SNAP RING	1
14	501-0713	SNAP RING	1
15	501-0714	SNAP RING	1
16	501-0011	BEARING	1
17	501-0715	BEARING CUP & CONE	2
18	501-0716	BEARING CUP & CONE	1
19	501-0717	SEAL	1
20	501-0772	SEAL	1
21	501-0730	CAP	1
22	501-0720	OIL DRAIN PLUG	1
23	501-0762	GEAR & SHAFT SET	1
24	501-0722	OIL PLUG	1
25	501-0723	SHIM	VAR
26	501-0724	SHIM	VAR
27	501-0725	SHIM	VAR
28	501-0726	SHIM	VAR
29	501-0727	SHIM	VAR
30	501-0728	SHIM	VAR
31	501-0762	SHAFT & GEAR SET	1

MAIN 80 DEG CV PTO (540 RPM)
415-0001-04

1. YOKE S8/1R8 RT EL 80 CV 1-3/8" Z6 WR7	(1)	501-0507-01
2. CROSS KIT SFT S8 80CV	(2)	501-0508-01
5. OUTER TUBE YOKE 1R8	(1)	501-0511-01
6. CENTRAL BODY SFT S8 80CV	(1)	501-0510-01
8. FLEXIBLE ROLL PIN #8/9 OUTER 12X90MM	(1)	501-0513
12. OUTER TUBE	(1)	501-0514-01
13. INNER TUBE	(1)	501-0515-01
16. FLEXIBLE ROLL PIN #8/9 INNER 12X75MM	(1)	501-0516
17. YOKE #8 INNER #7 TUBE (1R8)	(1)	501-0517-01
21. YOKE SFT S9 1 3/8 Z6 TAPER PIN	(1)	501-0519
22. CROSS KIT S9 34.9X106 45° ZERK	(1)	501-0518
26. SHIELD SUPPORT #8-9-10 OUTER 8G502	(1)	501-0520
27. SHIELD SUPPORT SFT EL CV80° S8	(1)	501-0541
28. SELF TAPPING SHIELDING SCREW	(6)	501-0500
29. OUTER SHIELD TUBE	(1)	501-0522-01
30. INNER SHIELD TUBE	(1)	501-0523-01
32. SHIELD SUPPORT #8-9-10 INNER 8G602	(1)	501-0525
33. SHIELD CONE 108/S8 80° CV	(1)	501-0529-01
35. I.CONE SHIELD CONE #8-9 INNER F4	(1)	501-0524
40. SHIELD CHAIN S-HOOK + 60 MM CLIP	(3)	501-0526
45. GREASING COLLAR #6 RILSAN 6839	(1)	501-0498
51. BALL COLLAR KIT 1-3/8 GO-RT	(1)	501-0540
61. TAPER PIN KIT 1-3/4" 20Z - 3 PINS	(1)	501-0531
97. COMPLETE SHIELD KIT	(1)	501-0609

MAIN 80 DEG CV PTO (540 RPM)
415-0001-04

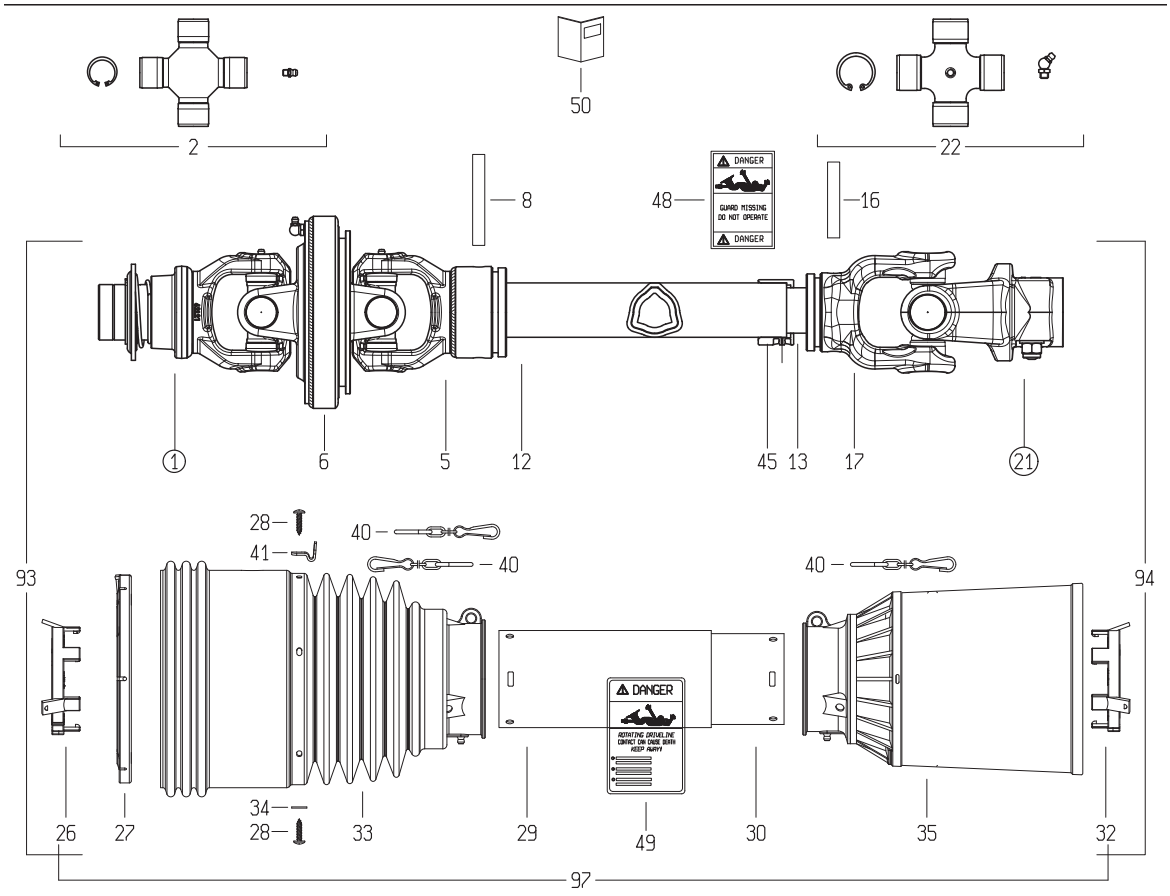

1

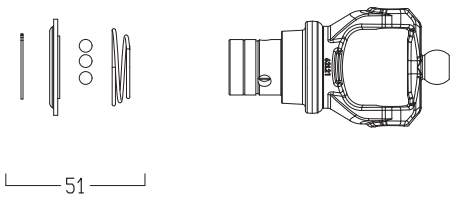

21

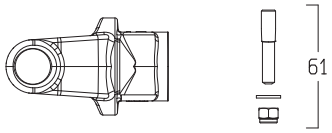

MAIN 80 DEG CV PTO (1000 RPM)

415-0001-02 (1-3/4 - 20Z) 501-0564-02

415-0001-05 (1-3/8 - 21Z) 501-0565-02

1. YOKE S6/1R6 RT EL 80 CV 1-3/8" 21Z	(1)	501-0533-02
1A. YOKE S8/1R8 RT EL 80 CV 1-3/4" 20Z	(1)	501-0533-03
2. CROSS KIT SFT S6 80CV	(2)	501-0534-01
5. OUTER TUBE YOKE 1R6.	(1)	501-0536-01
6. CENTRAL BODY SFT S6 80CV	(1)	501-0535-01
8. FLEXIBLE ROLL PIN #6 OUTER	(1)	343-1505
12. OUTER TUBE	(1)	501-0557-01
13. INNER TUBE	(1)	501-0558-01
16. FLEXIBLE ROLL PIN #6 INNER	(1)	343-1504
17. YOKE #6 INNER TUBE	(1)	343-1306
21. YOKE SFT #6 1 3/6 Z6 TAPER PIN	(1)	501-0559
22. CROSS KIT #6 45º ZERK	(1)	343-1212
26. SHIELD SUPPORT #6-7 OUTER	(1)	343-1979
27. SHIELD SUPPORT SFT EL CV80º S6	(1)	501-0542-01
28. SELF TAPPING SHIELDING SCREW	(6)	501-0500
29. OUTER SHIELD TUBE	(1)	501-0585
30. INNER SHIELD TUBE	(1)	501-0587
32. SHIELD SUPPORT #6-7 INNER 8G602	(1)	343-1980
33. SHIELD CONE 108/S6 80º CV	(1)	501-0543-01
35. I.CONE SHIELD CONE #6 INNER F4	(1)	501-0079-01
40. SHIELD CHAIN S-HOOK + 60 MM CLIP	(3)	501-0526
45. GREASING COLLAR #6 RILSAN 6839	(1)	501-0562
51. BALL COLLAR KIT 1-3/8 GO-RT	(1)	501-1102
61. TAPER PIN KIT 1-3/4" 20Z - 3 PINS	(1)	501-0531
97. COMPLETE SHIELD KIT	(1)	501-0609-01
98. CV JOINT COMPLETE	(1)	501-0565-02
98A. CV JOINT COMPLETE	(1)	501-0564-02

MAIN 80 DEG CV PTO (1000 RPM)

415-0001-02 (1-3/4 - 20Z)

415-0001-05 (1-3/8 - 21Z)

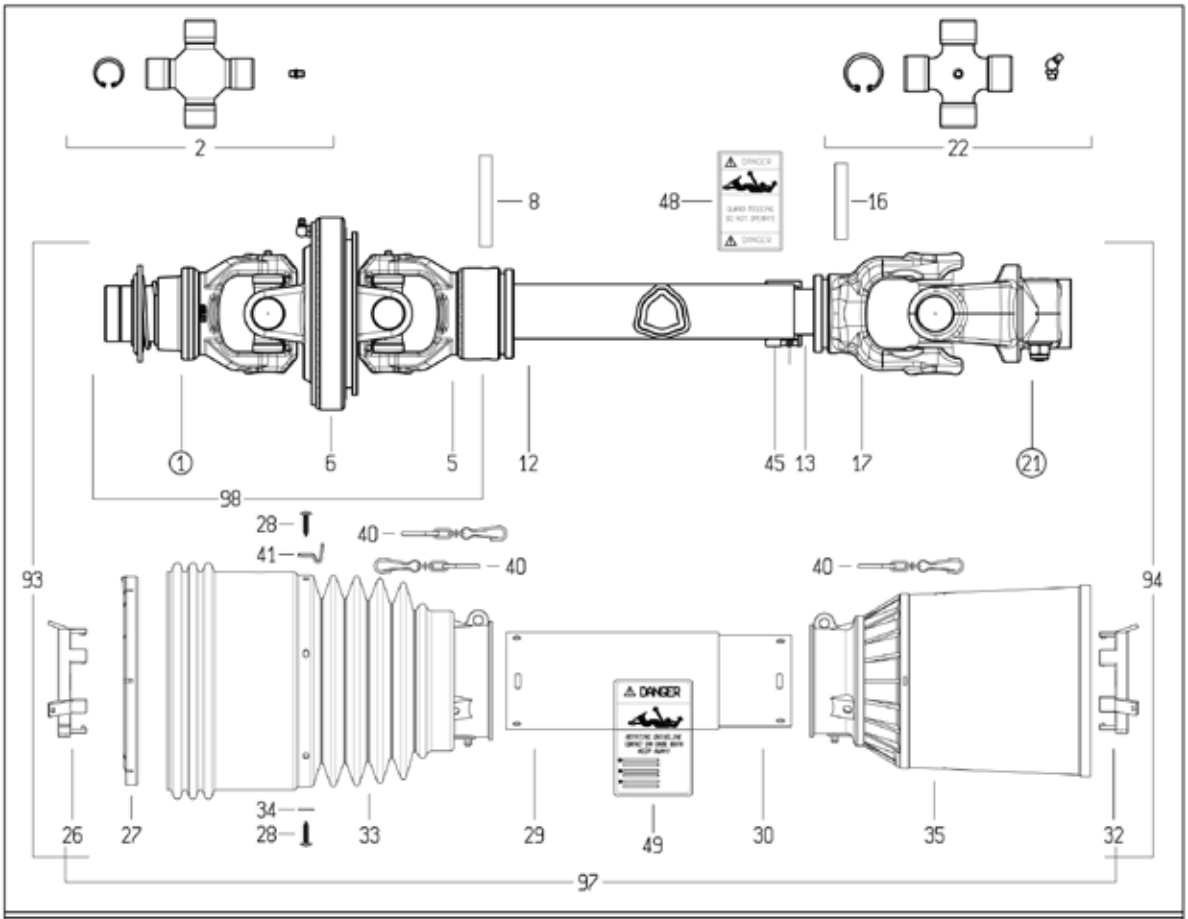

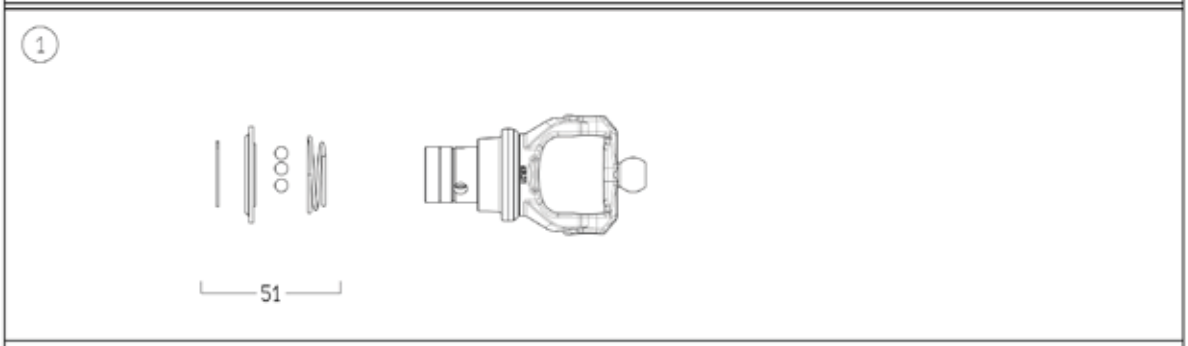

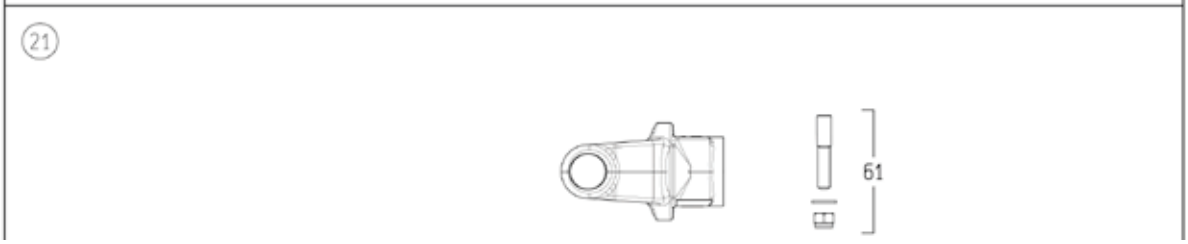

WING PTO (540RPM & 1000RPM)
415-0008-01

ITEM	PART NO.	DESCRIPTION	QTY.
1	501-0479	YOKE	1
2	501-0445	CROSS BEARING	2
5	501-0447	OUTER TUBE YOKE	1
11	501-0448	ROLL PIN	1
12	501-1756	OUTER TUBE	1
13	501-1757	INNER TUBE	1
14	501-0449	ROLL PIN	1
21	501-0450	INNER TUBE YOKE	1
30	501-0547-01	SLIP CLUTCH	1
31	501-0434	OUTER SHIELD BEARING	1
32	501-0495	OUTER CONE	1
33	501-1758	OUTER TUBE SHIELD	1
34	501-1759	INNER TUBE SHIELD	1
35	501-0565	INNER CONE	1
36	501-0435	INNER SHIELD BEARING	1
37	501-0114	CHAIN	2
39	501-0498	GREASE COLLAR	1
51	501-0484	TAPER PIN	1
71	501-0485	SPRING	8
72	501-0555-01	FLANGE YOKE	1
73	501-0487	COLLAR	1
74	501-0552-01	FRICTION DISC	4
75	501-0554-01	LINING PLATE	1
77	501-0548-01	HUB	1
78	501-0484	TAPER PIN	1
79	501-0551-01	INNER PLATE	2
80	501-0550-01	PRESSURE PLATE	1
81	501-0549	BOLT & NUT	8
97	501-1777	SHIELD COMPLETE	1

WING PTO (540RPM & 1000RPM)
415-0008-01

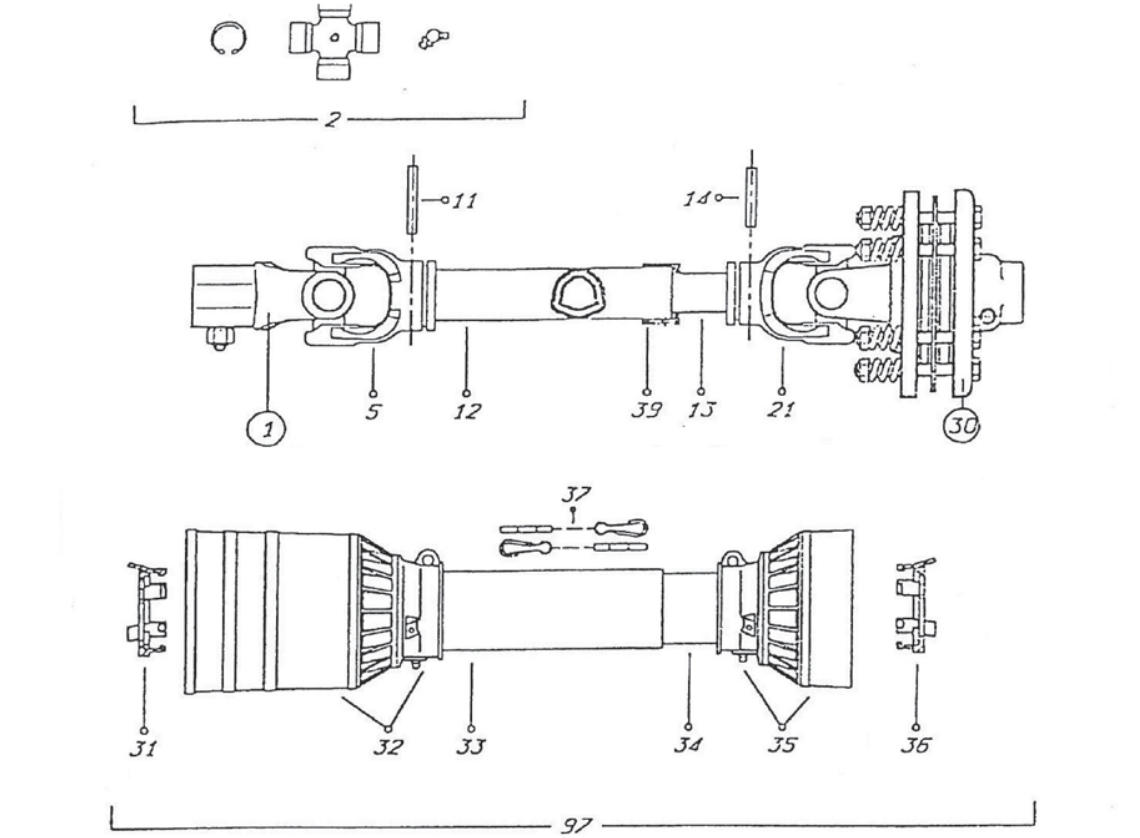

(1)

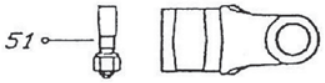

(30)

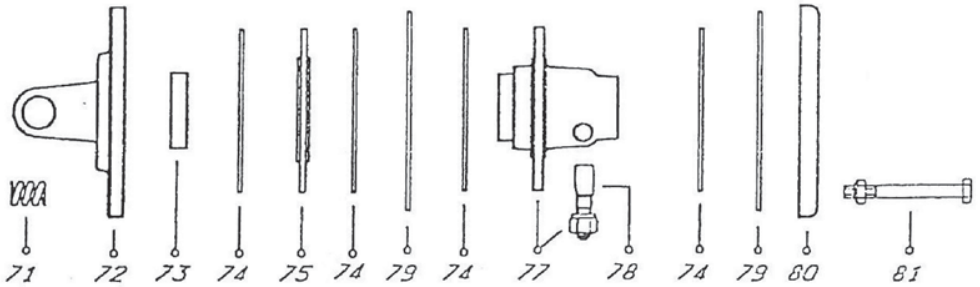

CENTER INTERMEDIATE PTO (540 RPM & 1000RPM)
415-0003-02

ITEM	PART NO.	DESCRIPTION	QTY.
1	501-0479	YOKE	1
2	501-0445	CROSS BEARING	2
5	501-0447	OUTER TUBE YOKE	1
11	501-0448	ROLL PIN	1
12	501-1760	OUTER TUBE	1
13	501-1761	INNER TUBE	1
14	501-0449	ROLL PIN	1
21	501-0450	INNER TUBE YOKE	1
30	501-0547-01	SLIP CLUTCH	1
31	501-0434	OUTER SHIELD BEARING	1
32	501-0495	OUTER CONE	1
33	501-1762	OUTER TUBE SHIELD	1
34	501-1763	INNER TUBE SHIELD	1
35	501-0565	INNER CONE	1
36	501-0435	INNER SHIELD BEARING	1
37	501-0114	CHAIN	2
39	501-0498	GREASE COLLAR	1
51	501-0484	TAPER PIN	1
71	501-0485	SPRING	8
72	501-0555-01	FLANGE YOKE	1
73	501-0487	COLLAR	1
74	501-0552-01	FRICTION DISC	4
75	501-0554-01	LINING PLATE	1
77	501-0548-01	HUB	1
78	501-0484	TAPER PIN	1
79	501-0551-01	INNER PLATE	2
80	501-0550-01	PRESSURE PLATE	1
81	501-0549	BOLT & NUT	8
97	501-1770	SHIELD COMPLETE	1

CENTER INTERMEDIATE PTO (540 RPM & 1000RPM)
415-0003-02

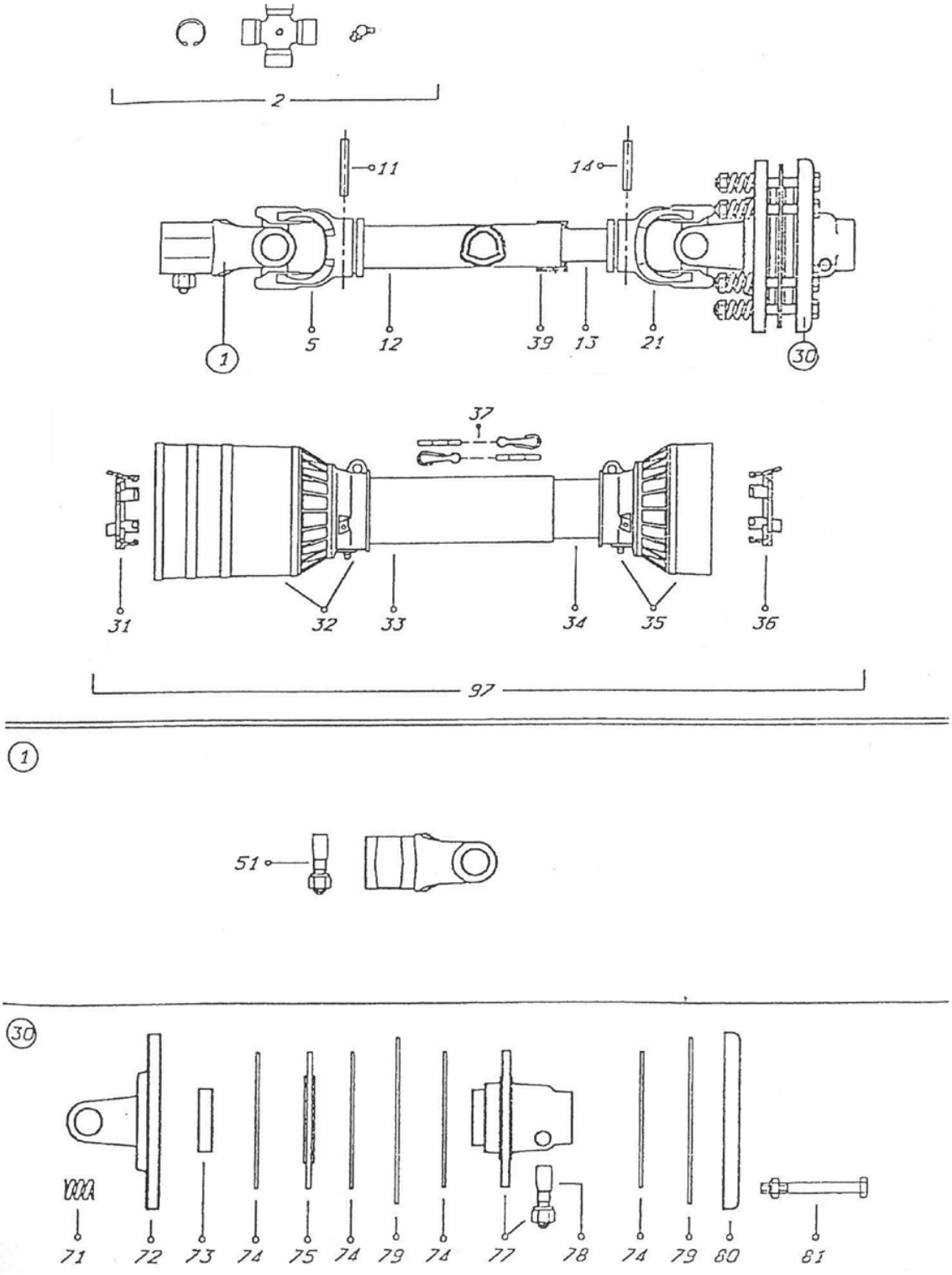

DOUBLE DIAMOND LIMITED WARRANTY

for new Modern
Galvanized 15′ Predator Rotary Cutter

A. Limited Warranties

Modern Manufacturing warrants any new Modern Manufacturing implement, purchased from an authorized Modern Manufacturing dealer, to the original non-commercial, state or municipal purchaser ("Purchaser") for a period not to exceed one (1) year from original purchase date, to be free from defects in material and workmanship.Further, the Modern Manufacturing Galvanized 15′ Predator ("Cutter") rotary cutter will be covered by the Double-Diamond Limited Warranty. This warranty provides a five (5) year limited gearbox warranty and a ten (10) year limited "deck rust thru" warranty. Painted cutters are covered with a three(3) year limited gearbox warranty only. Under these warranties, Modern Manufacturing's obligation to the original purchaser is limited to the repair or replacement of any parts found to be defective in material or workmanship under normal use and service during the applicable warranty term. Warranty services must be performed by a dealer or service center authorized by Modern Manufacturing using only new or remanufactured parts or components furnished by Modern Manufacturing. Modern Manufacturing reserves the right to inspect any and all parts which are claimed to have been defective in material and workmanship. Modern Manufacturing makes no warranty as to the design, capability, capacity or suitability for the use of the implement.

B. Limited Warranty Service

To receive warranty service, the Purchaser must return the Registration and Warranty Card to Modern Manufacturing within 30 days of original purchase. Purchaser must report claim, in writing, to the authorized Modern Manufacturing dealer from whom the Purchaser purchased the implement originally or an approved Modern Manufacturing dealer within 30 days after the Purchaser discovers the circumstance for the basis of the claim. The purchaser ("at his expense") will be responsible for any service call and/or the return to and from the dealer's or service center's place of business. After examination of claim, if Modern Manufacturing finds the part(s) or workmanship to be defective, Modern Manufacturing will repair or replace defective goods or part(s) or reimburse Purchaser for the cost of the part(s) and reasonable labor charges. The choice will be solely decided by Modern Manufacturing.

C. Not Covered By Warranty

The limited warranty does not cover any goods or part(s) that have been subjected to improper or abnormal use, fire, negligence, abuse, alteration, modification, accident, lack of or improper maintenance, use of wrong oil or lubricants. This limited warranty does not apply to expendable items such as blades, shields, guards, pneumatic tires or any normal maintenance parts or service. The Double-Diamond Limited Gearbox Warranty does not cover wear items such as teeth, chains, sprockets, belts, springs, gearbox lubricant, hydraulic fluid or any other items that in the company's sole judgement is a wear item. The Double-Diamond Limited "deck rust thru" Warranty does not cover surface rust caused by loss of galvanizing due to external forces such as scrapes, dents, extreme friction and/or wear, deformity due to accidents or abuse. Except as provided herein, no employee, agent, Dealer, or other person is authorized to give any warranties of any nature on behalf of Modern Manufacturing.

D. Disclaimer Of Implied Warranties & Consequential Damages

To the extent permitted by law, neither Modern Manufacturing or any other company affiliated with it makes any warranties, representations or promises as to the quality, performance or freedom from defect of the implements covered by this warranty. THIS INCLUDES IMPLIED WARRANTIES OF MERCHANTABILITY AND FITNESS FOR A PARTICULAR PURPOSE. TO THE EXTENT APPLICABLE, SHALL BE LIMITED IN DURATION TO THE APPLICABLE PERIOD OF WARRANTY SET FORTH ON THIS PAGE. THE PURCHASER' S ONLY REMEDIES IN CONNECTION WITH THE BREACH OR PERFORMANCE OF ANY WARRANTY ON THE MODERN MANUFACTURING IMPLEMENTS ARE THOSE SET FORTH ON THIS PAGE. IN NO EVENT WILL MODERN MANUFACTURING, THE DEALER OR ANY COMPANY AFFILIATED WITH MODERN MANUFACTURING BE LIABLE FOR INCIDENTAL OR CONSEQUENTIAL DAMAGES. Such incidental and consequential damages shall include but not be limited to: transportation charges other than normal freight charges; cost of installation other than cost approved by Modern Manufacturing ; duty; taxes; charges for normal service or loss of crops or any other loss of income; rental of substitute equipment, expenses due to loss, damage, detention or delay in the delivery of equipment or parts resulting from acts beyond Modern Manufacturing's control.

E. Miscellaneous

Proper venue for any lawsuits arising from or related to this limited warranty shall be only in Jefferson County, Texas. Applicable law may provide rights and benefits to the Purchaser in addition to those provided herein. If any provision of this limited warranty shall violate any applicable law and is held to be unenforceable, then the invalidity of such provision shall not invalidate any other provisions herein.

Modern Manufacturing may waive compliance with any of the terms of this limited warranty, but no waiver of any terms shall be deemed to be a waiver of any other term.

MODEL_____ SERIAL # _____

DEALER_____ DATE DELIVERED _____

DOUBLE DIAMOND LIMITED WARRANTY

All Modern Ag Products implements carry a non-transferable one-year manufacturing defects warranty, which covers any latent defect in parts and/or workmanship. Our exclusive DOUBLE DIAMOND LIMITED WARRANTY SYSTEM additionally covers gearboxes and deck rust thru on all galvanized cutters for varying periods of time. See explanation below.

RED DOUBLE DIAMOND

Provides a 5 year limited warranty on gearbox and 10 year limited warranty on deck rust thru.
Galvanized Predatorrr series only.

LIMITED WARRANTY POLICY & REGISTRATION

Modern Inc. warrants its products for a period of one year after date of sale by authorized dealer to be free from defects in material and workmanship, and will replace at its factory, any parts that will be returned, with shipping charges prepaid, and when examined by us, will disclose it to be defective. This warranty will not apply to implements or parts that have been subjected to misuse, negligence, accident, or that have been altered or repaired.

1. Parts may not be returned without authorization by ModernAg Products
2. All products returned under warranty inspection claim must be returned PREPAID to our factory.
3. Our obligation under the above warranty is limited to repair or replacement at our factory of any part or parts which Modern Inc. decides to be defective.
4. Products or parts that have been examined by Modern Inc. and determined to be improperly operated, damaged by accident or negligence, field repaired or altered are not covered by this warranty.
5. Modern Inc. reserves the right to change our specification and designs at any time.
6. This warranty will not obligate Modern Inc. to bear any cost of labor field replacement, testing or adjustment.

DEALER: I hereby certify that:

1. The machine has been correctly assembled in accordance with manufacturers instructions.
2. All bolts have been checked and tighted.
3. All other pre-delivery checks have been completed as per operators manual.
4. Purchaser was given operators manual and instructed in safe and correct usage of machine and on limitation of warranty.
5. Machine was tested and operates correctly.

PURCHASER: I hereby certify that:

1. The machine is correctly assembled.
2. Receipt of the operators manual which I have read and clearly understood.
3. I have a clear understanding of the warranty limitations.
4. I have a clear understanding on the correct and safe operation of the machine.
5. That the machine needs regular maintenance as per instructions in operators manual.
6. I have a clear understanding on the capacity of this machine and am aware of its limitations.

MODEL_____ SERIAL # _____

DEALER_____ DATE DELIVERED _____

DEALER'S STAMP

MAIL TO:

PURCHASERS' ADDRESS:

(On painted cutters, the extended limited warranties only cover gearboxes. The warranties do not cover deck rust thru.)